ERMEC, S.L. BARCELONA
C/ Francesc Teixidó, 22
E-08918 Badalona
(Spain)

Tel.: (+34) 902 450 160
Fax: (+34) 902 433 088
info@ermec.com
www.ermec.com

ERMEC, S.L. MADRID
C/ Sagasta, 8, 1ª planta
E-28004 Madrid
(Spain)

PORTUGAL
portugal@ermec.com
BILBAO
bilbao@ermec.com

1000 Series

Harsh Environments

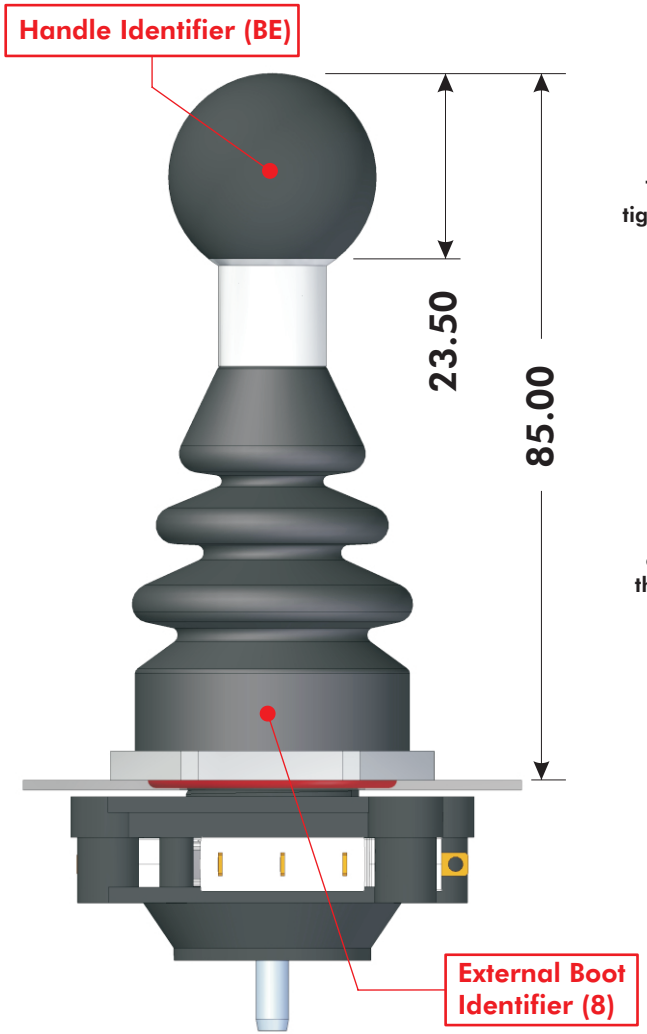

While holding the lower base in position, take the assembled top section and wind on using the knob. This should be applied finger tight until the thread bottoms out.

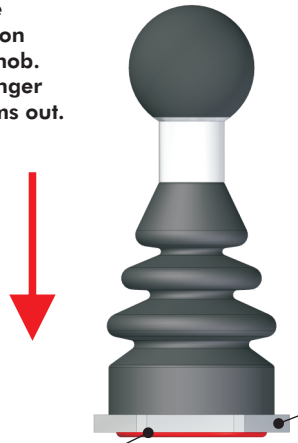

Machined HEX finishing NUT - Apply torque of 1-1.5 Nm to seal.

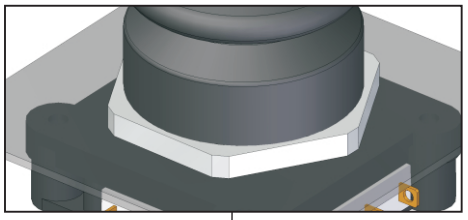

Ensure that the rubber o-ring is in position before threading the top section on.

Existing 1000 Series 22mm bushing and panel cut out.

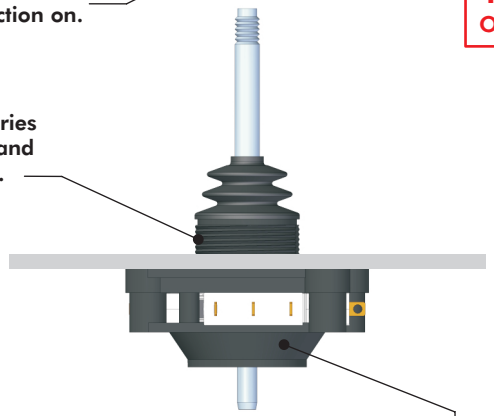

Apply the assembled base through the mounting cut out in the panel (shown above left)

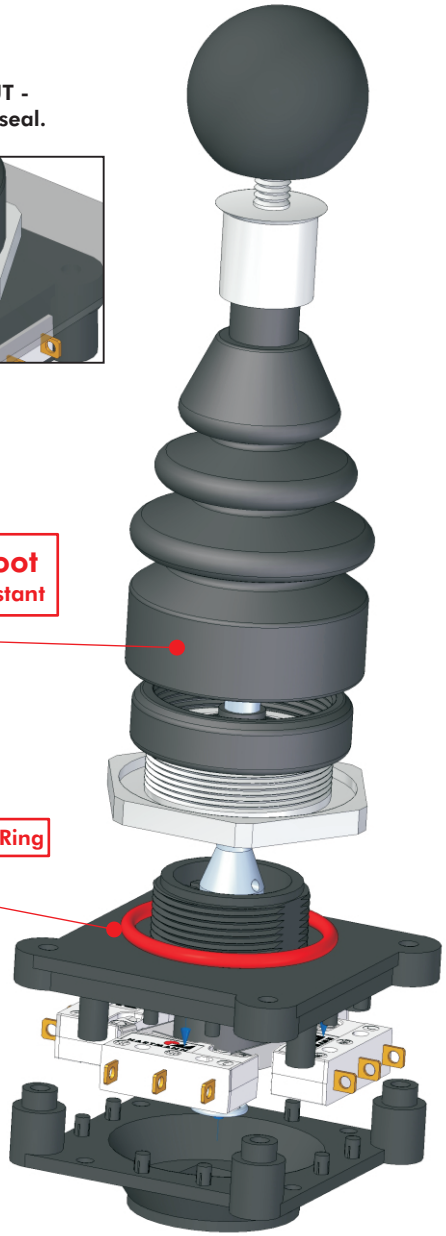

Notes: Users may still select their choice of Micro switch and number of poles according to the standard 1000 Series option list. Users may also select the joystick to have an open square gate (when no limiter is fitted) or a metal slot or cross limiter factory fitted.