AVTRON™ ENCODERS

A Nidec BRAND

ERMEC

ERMEC, S.L. BARCELONA
C/ Francesc Teixidó, 22
08918 Badalona SPAIN

Tel. +34 902 450 160
info@ermec.com
www.ermec.com

ERMEC, S.L. - MADRID
C/ Puerto Rico, 4
28222 Majadahonda (Madrid) SPAIN

bilbao@ermec.com
portugal@ermec.com

ERMEC, S.L. BARCELONA
C/ Francesc Teixidó, 22
08918 Badalona SPAIN

Tel. +34 902 450 160
info@ermec.com
www.ermec.com

ERMEC, S.L. - MADRID
C/ Puerto Rico, 4
28222 Majadahonda (Madrid) SPAIN

bilbao@ermec.com
portugal@ermec.com

TABLE OF CONTENTS

GENERAL INFORMATION - PG. 1 - **ENCODER SELECTION & TECHNOLOGY** - PG. 2-3 - **HAZARDOUS LOCATION** - PG. 4

INCREMENTAL ENCODERS

Hollow Shaft
- Light Mill Duty: 5-10
- Mill Duty: 11-16
- Heavy Mill Duty: 17-38
- Severe Mill Duty: 39-40

Shafted
- Light Mill Duty: 41-46
- Heavy Mill Duty: 47-50
- Severe Mill Duty: 51-52

Sensors
- Severe Mill Duty: 53-54

ABSOLUTE ENCODERS

Hollow Shaft
- Light Mill Duty: 55-58
- Severe Mill Duty: 59-60

Shafted
- Light Mill Duty: 61-64
- Severe Mill Duty: 65-66

HAZARDOUS DUTY

Hollow Shaft
- Heavy Mill Duty: 67-82
- Severe Mill Duty: 83-84

Shafted
- Heavy Mill Duty: 85-86
- Severe Mill Duty: 87-88

Sensors
- Severe Mill Duty: 89-92

ENCODER CABLES - PG. 93 - **UPGRADES AND RETROFITS** - PG. 95 - **OUTPUT SPECIFICATIONS** - PG. 96 - **ENCODER PRODUCT COMPARISON** - PGs. 97-98

GENERAL INFORMATION

Nidec Industrial Solutions develops, produces and sells top-quality American engineered Avtron Encoders for industrial applications worldwide.

Avtron Manufacturing Inc., was established in 1953 providing valuable test solutions to the aerospace industry, and began developing our feedback devices in 1964 with a total focus on reliability. We are driven to maximize customer uptime, which is manifested in the durability of our designs and the responsiveness of our service.

Avtron Encoders are the world's largest-selling brand of heavy-duty encoders. We sell to a wide range of industries, from paper mills to metals, mining, wind power, oil and gas drilling. Anywhere an encoder failure would cost money and downtime, you need an Avtron Encoder.

Avtron became part of Nidec Corporation, a $15 Bn global industrial manufacturing and technology company, in 2012, and as such we have expanded our reach and ability to service customers worldwide. We proudly mark every one of our encoders with our Avtron Encoders brand, symbolizing quality, reliability, service and value.

Why Avtron Encoders?

Avtron Encoders are far more durable than competitive units. They feature cast aluminum housings, potted electronics, and huge bearings. For maximum reliability select our modular models with no bearings at all and Wide-Gap™ technology. Avtron Encoder magnetic sensors also increase reliability by being impervious to the dirt, dust, oil and liquids that disable optical encoders.

Every Avtron Encoder is 100% tested - not sampled or randomly selected. Some Avtron Encoder models have experienced over 4,500,000 hours Mean-Time-Between-Failure in outdoor applications!

Many of our encoders come with onboard diagnostics. They digitally self-tune for best signal, and a remote alarm contact and LED notify you if there is a problem. Yet our encoders keep working as long as they can, giving you time to schedule maintenance.

We back our encoders with 24/7/365 no-charge engineering technical support (in English) to ensure you can get the help you need, when you need it.

ERMEC
ERMEC, S.L. BARCELONA
C/ Francesc Teixidó, 22
08918 Badalona SPAIN
Tel. +34 902 450 160
info@ermec.com
www.ermec.com
ERMEC, S.L. - MADRID
C/ Puerto Rico, 4
28222 Majadahonda (Madrid) SPAIN
bilbao@ermec.com
portugal@ermec.com

ENCODER SELECTION & TECHNOLOGY

ULTRA-DURABLE SENSORS

Depending on the needs and construction of the application we use optical and magnetic sensor technologies to generate the signals in our encoders.

Follow this approach when selecting to ensure that you are focusing on the right solution for your application.

1. Determine your signal needs: Incremental or Absolute
2. Consider mechanical mounting requirements
3. Consider environmental factors

MAGNETIC - vs - OPTICAL

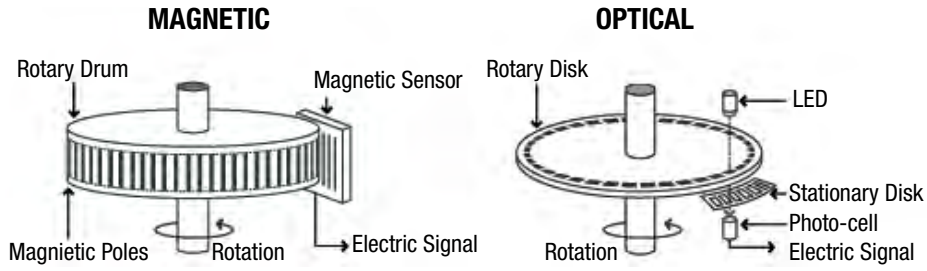

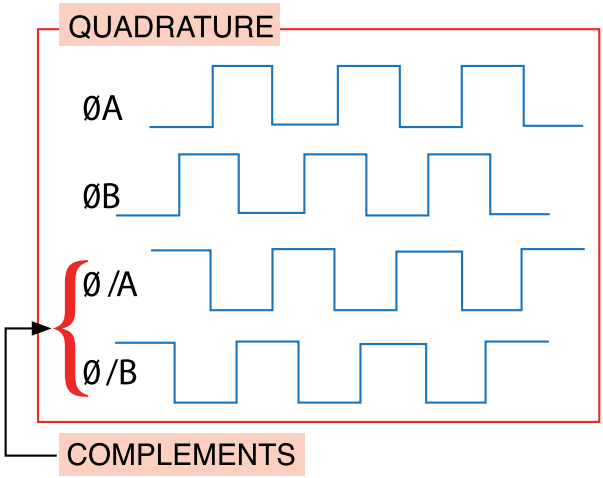

Incremental

Incremental encoders create a series of square wave pulses to represent the measured motion. Each incremental pulse is the same. The principal difference lies in the electrical characteristics of the line driver; namely:
HTL (5V-24V in/out) TTL (5V-out 24V-in/5V-out)

Most incremental Avtron Encoders include a once-per-turn marker pulse. Only by measuring from a starting position, and keeping track of the number of pulses observed can incremental encoders be used to measure position. Therefore, most incremental encoders are used to measure and control velocity.

Look for our incremental models with high-power, fully short-circuit protected outputs. These encoders can drive the longest cables, yet they are protected from wiring errors.

Our incremental magnetic sensor technology enables Nidec to completely embed all the electronics in a solid brick of potting material, making them impervious to dirt, dust, oil, and water.

Absolute

Absolute encoders create a digital message to represent a position, which is sent to the controller. There are a huge number of communication output options for absolute encoders, and Nidec has industry-leading coverage.

The absolute position information is retained by the encoder, regardless of power interruptions. Absolute encoder messages typically have small communication-related delays which could affect velocity control. Therefore, most absolute encoders are used to measure and control position.

Nidec features a number of key innovations in our absolute encoders including Wiegand wire technology and solid state memory to enable multi-turn encoders without unreliable fragile glass disks, optical sensors, gears, batteries or super-capacitors.

Our industry-first severe duty absolute encoders include huge bearings and seals for maximum durability.

ERMEC
ERMEC, S.L. BARCELONA
C/ Francesc Teixidó, 22
08918 Badalona SPAIN
Tel. +34 902 450 160
info@ermec.com
www.ermec.com
ERMEC, S.L. - MADRID
C/ Puerto Rico, 4
28222 Majadahonda (Madrid) SPAIN
bilbao@ermec.com
portugal@ermec.com

MECHANICAL CONSIDERATIONS

Determine if your motor/mounting requires a "shafted" encoder (works with a flexible coupling to mate to a motor stub shaft) or if a "hollow shaft" encoder is needed.

ENVIRONMENTAL CONSIDERATIONS

Avtron Encoders are classified for overall durability according to the general harshness of the Duty Environment. This correlates roughly to temperature, humidity, contamination, cousticity, risk of getting hit or stood upon, etc. Within each of the following Duty Environments Avtron Encoders are available with a range of IP (Ingress Protection) ratings.

ENVIRONMENTAL RATINGS

Nidec environmental ratings don't mean IP sealing. Seals may break down quickly in applications with temperature changes or small, sealed bearings can be destroyed by loads. Instead, Nidec rates encoders for overall durability:

- **OEM Components**
  Require additional physical protection.

- **Light Mill Duty**
  For use in dry commercial and industrial environments with temperature controlled spaces.

- **Mill Duty**
  For use in typical industrial environments. More mechanically robust than light mill duty. Not recommended for environments with frequent temperature changes and chronically wet conditions.

- **Heavy Mill Duty**
  For more rugged environments with frequent temperature fluctuations and increased levels of contamination and moisture.

- **Severe Duty**
  This rating is for very wet or dusty environments with large and frequent temperature extremes including outdoor applications.

- **Hazardous Duty**
  Avtron Encoders are available for use in explosive atmospheres; these models are also extremely rugged. For applications that require an intrinsic safety isolator, Nidec offers the XRB3 (see page 93).

SHAFTED

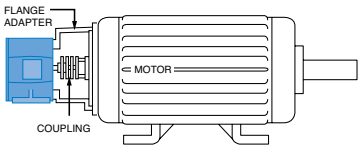

Flange Mounting: (Solid Shaft Coupled) Requires flange adapter with coupling.

SHAFTED

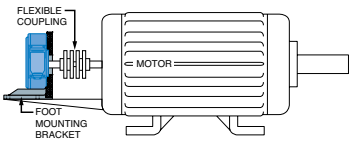

Foot Mounting: This method is usually used when encoders are coupled directly to rolls, gear boxes, or motors without C-Faces.

HOLLOW SHAFT

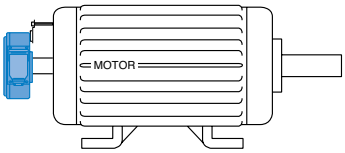

Hollow Shaft/Tether Mounting: Stub shaft required. Shaft requirements depend on the encoder selected.

MODULAR

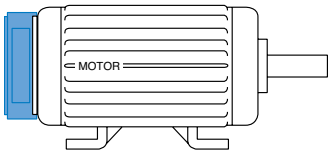

C/FC Face Mounting: Requires motor stub shaft and one of the following: 115mm, 4.5", 6.75", 8.5" 12.5" C/FC-Face.

ERMEC
ERMEC, S.L. BARCELONA
C/ Francesc Teixidó, 22
08918 Badalona SPAIN
Tel. +34 902 450 160
info@ermec.com
www.ermec.com
ERMEC, S.L. - MADRID
C/ Puerto Rico, 4
28222 Majadahonda (Madrid) SPAIN
bilbao@ermec.com
portugal@ermec.com

HAZARDOUS LOCATION

DURABILITY

The Avtron Encoders "DNA" of performing in heavy and severe-duty applications – ensuring uptime with fully potted electronics, magnetic sensor technology and over-spec bearings (or no bearings at all!) – is present in our SMARTSafe™ XR and XP families. These are not simply the repackaged or relabeled fragile optical encoders you will find from our competitors.

Nidec offers a full line of rugged UL and ATEX certified Avtron Encoders for hazardous locations. We offer Intrinsically Safe and Explosion Proof options for UL Class 1 / Div 1 / ATEX Zone 1, including the industry's ONLY modular Bearingless, No-Barrier, Magnetic, Incremental encoders – the SMARTSafe™ XP line.

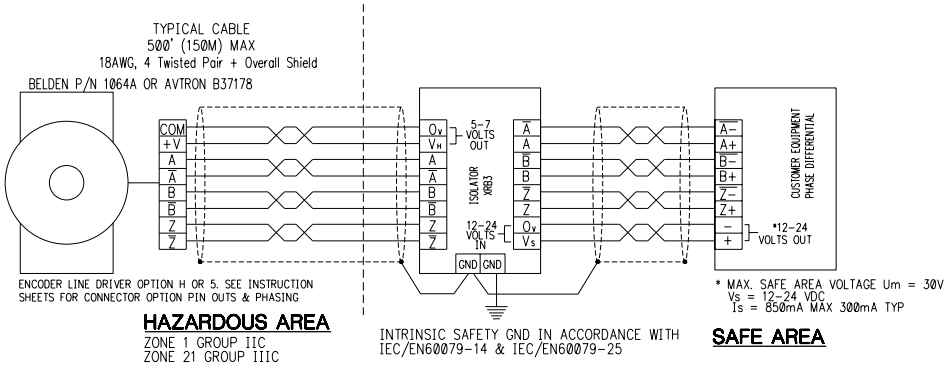

Class I & II / Div 1
A location in which ignitable flammable gases or vapors or combustible vapors or dust are **Likely to exist under Normal Operating Conditions.**

Typically use Explosion Proof or Intrinsically Safe protection.

Class I & II / Div 2
A location in which ignitable flammable gases or vapors or combustible vapors or dust are **Not Likely to exist under Normal Operating Conditions.**

Typically use Non-Incendive protection or energy-limited supply.

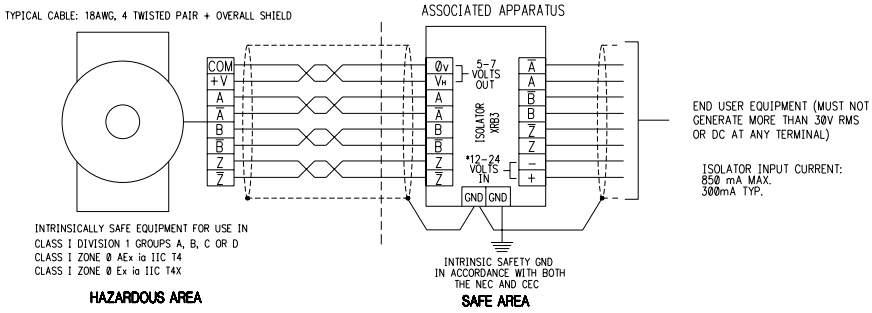

	North America - UL "Class / Div" or "Class / Zone" system				Europe, Rest of World* cUL, ATEX, IECEx	
	GAS	**DUST**	**GAS**	**DUST**	**GAS**	**DUST**
Hazards LIKELY TO EXIST under normal operating conditions	**Class I**	**Class II**	**Class I**	**Class II**	**Zone 0 Zone 1**	**Zone 20 Zone 21**
	Div 1	**Div 1**	**Zone 1**	**Zone 1**		
	Acetylene - A	Metal - E	Acetylene, Hydrogen - II C	Conductive Dust II	Acetylene, Hydrogen - II C	Conductive Dust II
	Hydrogen - B	Carbonaceous - F		Carbonaceous - IIIB		Carbonaceous - IIIB
	Ethylene - C	Agricultural - G	Ethylene - II B	Non-Conductive Dust IIIB	Ethylene - II B	Non-Conductive Dust IIIB
	Propane - D		Propane - II A		Propane - II A	
Hazards NOT LIKELY TO EXIST under normal operating conditions	**Class I**	**Class II**	**Class I**	**Class II**	**Zone 2**	**Zone 22**
	Div 2	**Div 2**	**Zone 2**	**Zone 2**		
	Acetylene - A	Carbonaceous - F	Acetylene, Hydrogen - II C	Conductive Dust IIIC	Acetylene, Hydrogen - II C	Conductive Dust IIIC
	Hydrogen - B	Agricultural - G		Carbonaceous - IIIB		Carbonaceous - IIIB
	Ethylene - C		Ethylene - II B	Non-Conductive Dust IIIB	Ethylene - II B	Non-Conductive Dust IIIB
	Propane - D		Propane - II A		Propane - II A	

* Other local jurisdictions may apply

If an encoder is installed in a hazardous location (as defined by National Electric Code (NEC), Chapter 5), it needs to have a hazardous location approval.

Please refer to the NEC or other regional/local codes, guidelines, definitions and requirements for area classification and any wiring, enclosure, equipment &/or protection techniques that may apply to your installation and application.

ERMEC, S.L. BARCELONA
C/ Francesc Teixidó, 22
08918 Badalona SPAIN
Tel. +34 902 450 160
info@ermec.com
www.ermec.com
ERMEC, S.L. - MADRID
C/ Puerto Rico, 4
28222 Majadahonda (Madrid) SPAIN
bilbao@ermec.com
portugal@ermec.com

HS4 ENCODER - Incremental - Magnetic - Hollow Shaft - Light Mill Duty

SPECIFICATIONS

Operating Power:

Volts: 5 - 30 VDC **Current:** 140 mA @ 5 V, 70 mA @ 10 VDC, 40 mA @ 24 VDC, no load

Output Format: A Quad B with marker (A, /A, B, /B, Z, /Z) standard

Frequency Range: 0 to 1 mHz

PPR: 1 - 16,384 Standard (for other PPR needs consult factory)

Speed: 6000 RPM Max., (for higher speeds, consult factory)

Axial Load: 9 lb [40 N], Radial 25 lb [110 N]

Temperature: -40°C to +85°C

Environment: up to IP69K (when provided with shaft seals, SST housing)

Vibration: 10 G (10 Hz – 1000 Hz, EN 60068-2-6)

Shock: 100 G (half sine 6 ms, EN 60068-2-27)

Weight: 0.44-1.76 lb [200-800 g]

Warranty: 2 Year No-Hassle

HS4 magnetic encoders are setting THE industry standard for incremental quadrature rotary encoders. This versatile lineup fits the same mounting patterns on all motors and machines as competitor optical units, but that's where the similarities end. We've incorporated magnetic sensing technology to this affordable set of encoders which makes them more resistant to dust, dirt, oil and other liquids that make ordinary optical encoders fail.

Our Wide-Gap™ technology provides for 10-20X larger air gap between sensor and rotor than ordinary optical encoder designs. Consider the resistance to vibration when you compare our 0.060" air gap to the typical 0.004" clearance from the thin, often flexible, optical disk spinning at full motor speeds. Our high-accuracy magnetic sensors provide high quality quadrature signals for precise velocity and position control with the durability of magnetic sensing technology.

Our magnetic HS4 model encoders are setting a new standard for quality, durability, and performance. Select an HS4 Avtron Encoder today!

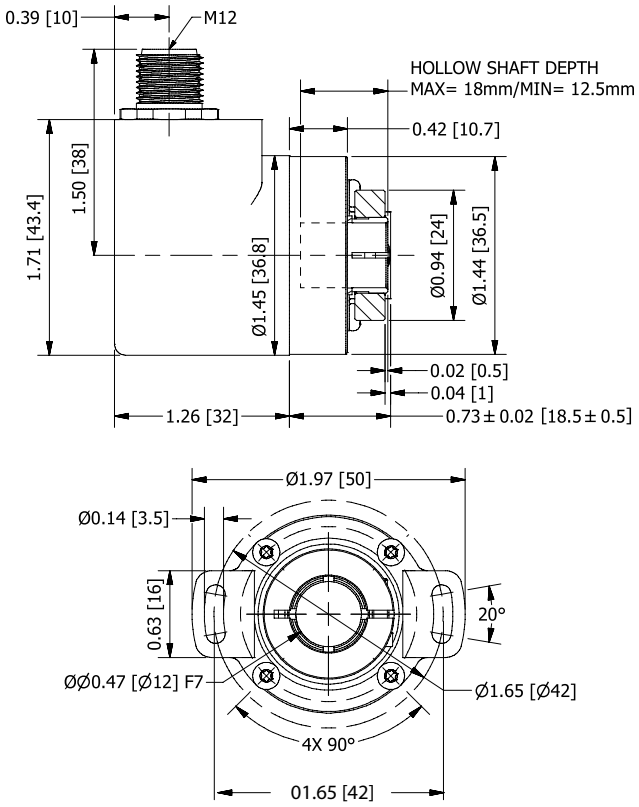

ERMEC, S.L. BARCELONA
C/ Francesc Teixidó, 22
08918 Badalona SPAIN
Tel. +34 902 450 160
info@ermec.com
www.ermec.com
ERMEC, S.L. - MADRID
C/ Puerto Rico, 4
28222 Majadahonda (Madrid) SPAIN
bilbao@ermec.com
portugal@ermec.com

HS4 SELECTION GUIDE

H	S	4											

MODEL	PPR	LINE DRIVER	SHAFT SIZE	CONNECTOR	IP RATING	HOUSING SIZE	PROTECTION	TETHER	CHANNELS	MOD CODE
HS4	**BA -** 30 **AA -** 32 **AK -** 80 **BC -** 100 **AH -** 120 **AC -** 128 **AM -** 200 **AL -** 240 **AN -** 256 **AE -** 360 **AG -** 400 **AB -** 480 **AQ -** 500 **AR -** 512 **AS -** 600 **AP -** 720 **AJ -** 960 **AW -** 1000 **AY -** 1024 **AZ -** 1200 **AV -** 1440 **AU -** 1800 **A3 -** 2000 **A4 -** 2048 **AT -** 3072 **A6 -** 3600 **AD -** 4096 **A8 -** 4800 **A9 -** 5000 **CB -** 10000 **CA -** 12700	**1 -** 5-30V In/Out **4 -** 5-30V In & 5V Out	**D -** 1/4" **A -** 3/8" **B -** 1/2" **C -** 5/8"* **L -** 6mm **M -** 8mm **N -** 10mm **2 -** 11mm **P -** 12mm **Q -** 14mm **R -** 15mm* *Native Bore / No Insert **Y -** All std inserts 1/4"-1/2" **Z -** All metric inserts 6mm-14mm	See Table Below	**A -** IP65 Seals, Alum **G -** IP67 Seals, Alum **J -** IP67 Seals, SST **K -** IP69K Seals, SST	**3 -** 36mm **4 -** 42mm **5 -** 58mm	**0 -** No Basket **1 -** Protective Basket	See Table Below	**A -** All channels (A, /A, B, /B, Z, /Z) **B -** A, /A, B, /B, No marker **E -** A, B, Z, No compliments	**000 -** None **901 -** 1' [0.3m] cable **902 -** 2' [0.6m] cable **903 -** 3' [0.9m] cable **905 -** 5' [1.5m] cable **910 -** 10' [3m] cable **915 -** 15' [4.5m] cable **920 -** 20' [6m] cable **925 -** 25' [7.5m] cable **930 -** 30' [9m] cable

Note: Some combinations of seals, bore size and housing size are not possible. See online Configurator for options selections.

CONNECTOR									
A - 10 pin MS w/o Plug, Avtron/BEI Pinout **B -** 10 pin MS w/o Plug, Dynapar HS35 pinout (Rev Phasing)	**C -** 10 pin MS with Plug, Avtron/BEI Pinout **D -** 10 pin MS with Plug, Dynapar HS35 pinout (Rev Phasing)	**E -** 6 pin MS w/o Plug, BEI/Avtron HS35 pinout **F -** 6 pin MS w/o Plug, Dynapar HS35 Pinout (Rev Phasing)	**G -** 6 pin MS with Plug, BEI/ Avtron HS35 pinout **H -** 6 pin MS with Plug, Dynapar HS35 Pinout (Rev Phasing)	**J -** 7 pin MS w/o Plug, Avtron/BEI HS35 Pinout **K -** 7 pin MS w/o Plug, Dynapar HS35 Pinout (Rev Phasing)	**M -** 7 pin MS with Plug, Avtron/BEI HS35 Pinout **N -** 7 pin MS with Plug, Dynapar HS35 Pinout (Rev Phasing)	**R -** 10 Pin Mini Twistlock with Plug **T -** M12-8 pin w/o Plug, Global Pinout	**U -** M12-8 pin w/o Plug, USA Pinout (Rev Phasing) **2 -** M23-12 Pin w/o Plug, Leine & Linde and Hubner pinout	**3 -** M23-12 Pin w/o Plug, Inverted Hubner Signals **5 -** M12-5 Pin w/o Plug	**7 -** M12-8 pin w/o Plug, Global Pinout (Rev Phasing) **W -** 3.2ft [1m] Cable (also use with special mod 9XX)

TETHER OPTIONS				
A - Dual-Tab Tether: 1.65" [42mm] BC, 0.14" [3.5mm] slot	**B -** Dual-Tab Tether: 2.48" [63mm] BC, 0.13" [3.2mm] slot	**C -** Dual-Tab Tether: 1.65"-2.48" [42-63mm] BC, 0.14" [3.6mm] slot	**D -** Fan Cover Tether: 1.57-2.95" [40-75mm] BC, 0.45" [11.4mm] slot	**X -** No Tether

SHAFT OPTION	HOUSING	SEALS (IP RATING)
A	3, 5	A, G
B	3, 5	A, G
C	All (3, 4*, 5)	A, G, J
R	3, 5	A, G, J
T	3, 5	A, G, J

* "4" Housing only available with "K" seals

CONNECTOR CODES	HOUSING	CONNECTOR EXIT
A, B, C, D, E, F, G, H, J, K, M, N, R	3 - 36mm	R - Radial (side) ONLY
	5 - 58mm	A - Axial (end) ONLY
2, 3, 5, T, U, W	3, 4, 5	A,R

CONNECTOR CODES	CHANNEL
A, B, C, D, R, T, U, 2, 3, 7, W	A
E, F, G, H, J, K, M, N	B,E
5	E

ERMEC
ERMEC, S.L. BARCELONA
C/ Francesc Teixidó, 22
08918 Badalona SPAIN
Tel. +34 902 450 160
info@ermec.com
www.ermec.com
ERMEC, S.L. - MADRID
C/ Puerto Rico, 4
28222 Majadahonda (Madrid) SPAIN
bilbao@ermec.com
portugal@ermec.com

HS25A ENCODER - Incremental - Optical - Hollow Shaft - Light Mill Duty

SPECIFICATIONS

Operating Power:
Volts: 5 - 28 VDC **Current:** 50 mA, no load
Output Format: A Quad B with marker (A, /A, B, /B, Z, /Z)
Frequency Range: 0 to 125 KHz
PPR: 1 - 3600 standard (for other PPR needs up to 8192 consult factory)
Speed: 6000 RPM Max., (for higher speeds, consult factory)
Temperature: -20°C to 100°C
Environmental: IP65; Nema 4, 13 Rating
Vibration: 5-2000 Hz
Shock: 50 G, 11 mS duration
Weight: 0.95 lb [431 g]
Warranty: 2 Year No-Hassle

HS25A encoders fit shafts from 3/8" - 3/4" 6mm - 16mm using a durable shaft insert; units may be resized by replacing or removing the insert, enabling our factory, distributors, and customer stockrooms to swiftly meet any need. The shaft insert provides isolation from motor shaft currents, while permitting case grounding to meet NEC requirements.

Avtron Encoders have superior shaft seals and bearings that stay sealed to keep contaminants out, through temperature cycling and liquid sprays. Our encoder seals are protected by mechanical barriers to prevent flexing or failure, and Avtron Encoders' superior bearings feature synthetic lubricants for even longer life.

Many competitive optical encoder designs risk sensor damage from any vibration or shock: sensors ride less than four thousandths of an inch from the thin, often flexible, optical disk spinning at full motor speeds. Some designs even use thin glass disks in "industrial" products! Avtron Encoders use only unbreakable disks and a sensor to disk gap over 8X larger than the competition.

Our optical HS25A encoders use superior sensor, disk, bearing, and seal technology to give top performance in industrial conditions. Select an HS25A today!

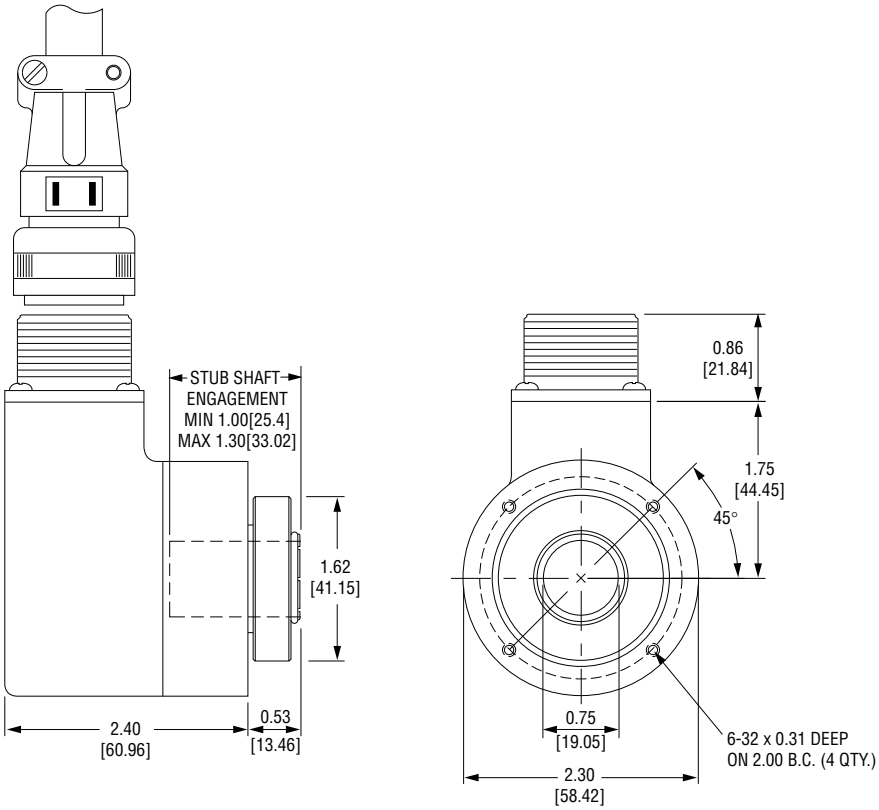

ERMEC
ERMEC, S.L. BARCELONA
C/ Francesc Teixidó, 22
08918 Badalona SPAIN
Tel. +34 902 450 160
info@ermec.com
www.ermec.com
ERMEC, S.L. - MADRID
C/ Puerto Rico, 4
28222 Majadahonda (Madrid) SPAIN
bilbao@ermec.com
portugal@ermec.com

HS25A SELECTION GUIDE

H	S	2	5	A										

MODEL	PPR	LINE DRIVER	SHAFT BORE	CONNECTOR OPTIONS	MOUNTING STYLE	PROTECTION	ANTI-ROTAION TETHER OPTION	CHANNELS	SPECIAL OPTIONS
HS25A	**A -** 1 **C -** 25 **F -** 60 **G -** 100 **H -** 120 **K -** 200 **L -** 240 **M -** 250 **N -** 256 **P -** 300 **E -** 360 **Q -** 500 **R -** 512 **S -** 600 **T -** 625 **U -** 720 **V -** 900 **W -** 1000 **Y -** 1024 **Z -** 1200 **1 -** 1250 **3 -** 2000 **4 -** 2048 **5 -** 2500 **6 -** 2540 **7 -** 3600	**1 -** 5-28V **2 -** 5-28V, Open Collector **4 -** 5-28V in, 5V out	**0 -** Non-std. Shaft **A -** 3/8” **B -** 1/2” **C -** 5/8” **D -** 3/4” (no insert) **L -** 6mm **M -** 8mm **N -** 10mm **P -** 12mm **Q -** 14mm **S -** 16mm **U -** Universal 3/8” to 3/4” (all inserts) **Z -** Metric 6mm to 16mm (all inserts)	See Table Below	**E -** End of shaft only	**0 -** None **1 -** basket	**X -** None **A -** Fan cover, 1/4-20 **B -** Fan cover, 5/16-18 **C -** Fan cover, 3/8-16 **D -** Fan cover, all **E -** 4.5” or 6.75” C-Face **F -** 8.5” C-Face **G -** Torque arm **U -** Universal (all tether options)	**8.10 Pin Cons:** **A -** A,/A,B,/B,Z,/Z **6.7 Pin Cons:** **B -** A,/A,B,/B **E -** A,B,Z **F -** A,B	**000 -** None **9xx -** Specify cable length xx=feet (use w/ Connector Option “W”)

CONNECTOR OPTIONS					
10 Pin MS	**6 Pin MS**	**7 Pin MS**	**8 Pin M12**	**10 Pin Mini Twist Lock**	**Cable**
A - w/o plug (std. phasing) **B -** w/o plug (Dynapar HS35 phasing) **C -** “A” w/ plug **D -** “B” w/ plug	**E -** w/o plug (std. phasing) **F -** w/o plug (Dynapar HS35 phasing) **G -** “E” w/ plug **H -** “F” w/ plug	**J -** w/o plug (std. phasing) **K -** w/o plug (Dynapar HS35 phasing) **M -** “J” w/ plug **N -** “K” w/ plug	**T -** w/o plug (Turck Pinout) **U -** w/o plug (US Pinout)	**R -** 10 pin mini w/o plug **S -** 18" flex cable w/o plug	**W -** 18” flex cable

ERMEC
ERMEC, S.L. BARCELONA
C/ Francesc Teixidó, 22
08918 Badalona SPAIN
Tel. +34 902 450 160
info@ermec.com
www.ermec.com
ERMEC, S.L. - MADRID
C/ Puerto Rico, 4
28222 Majadahonda (Madrid) SPAIN
bilbao@ermec.com
portugal@ermec.com

HS35A ENCODER - Incremental - Optical - Hollow Shaft - Light Mill Duty

SPECIFICATIONS

Operating Power:
Volts: 5 - 28 VDC **Current:** 50 mA, no load
Output Format: A Quad B with marker (A, /A, B, /B, Z, /Z)
Frequency Range: 0 to 125 KHz
PPR: 100 - 5000 standard
Speed: 6000 RPM Max., (for higher speeds, consult factory)
Temperature: -20°C to 100°C
Environmental: IP65; Nema 4, 13 Rating
Vibration: 5-2000 Hz
Shock: 50 G, 11 mS duration
Weight: 1.6 lb [730 g]
Warranty: 2 Year No-Hassle

HS35A encoders fit shafts from 1/2" to 1" and 12mm-20mm using a durable shaft insert. Units may be resized by replacing or removing the insert, enabling our factory, distributors, and customer stockrooms to swiftly meet any need. The shaft insert and insulated bearings also provide isolation from motor shaft currents, while permitting case grounding to meet NEC requirements.

Avtron Encoders have superior shaft seals and bearings that stay sealed to keep out contamination caused by temperature cycling and liquid sprays. Our encoder seals are protected by mechanical barriers to prevent flexing or failure, and Avtron Encoders use superior bearings feature synthetic lubricants for even longer life.

Many competitive optical encoder designs risk sensor damage from any vibration or shock: sensors ride less than four thousandths of an inch from the thin, often flexible, optical disk spinning at full motor speeds. Some designs even use thin glass disks in "industrial" products! Avtron Encoders use only unbreakable disks and a sensor to disk gap over 8X larger than the competition.

Our optical HS35A encoders use superior sensor, disk, bearing, and seal technology to give top performance in industrial conditions. Select an HS35A Avtron Encoder today!

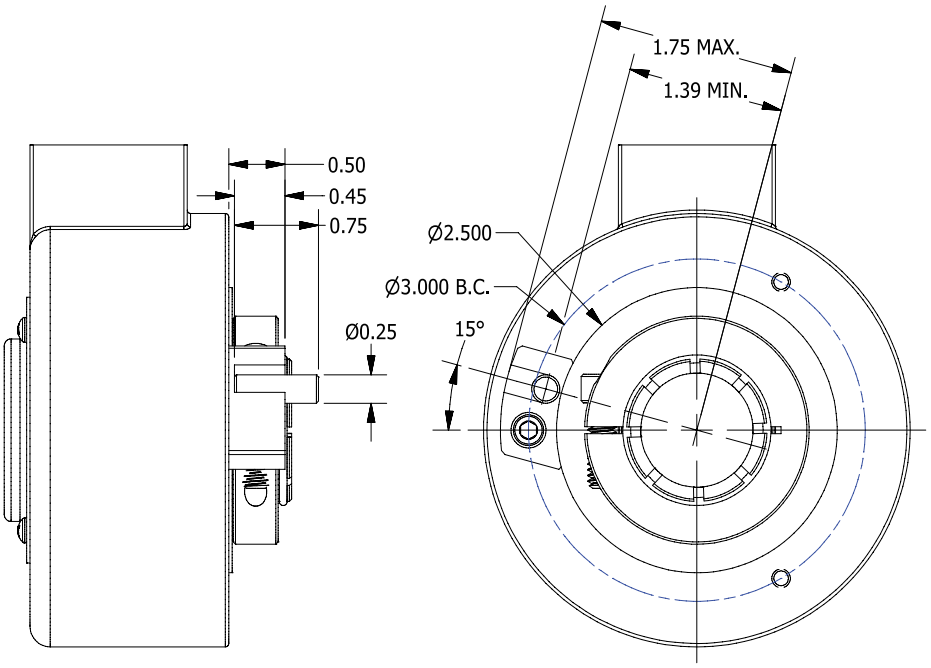

ERMEC
ERMEC, S.L. BARCELONA
C/ Francesc Teixidó, 22
08918 Badalona SPAIN
Tel. +34 902 450 160
info@ermec.com
www.ermec.com
ERMEC, S.L. - MADRID
C/ Puerto Rico, 4
28222 Majadahonda (Madrid) SPAIN
bilbao@ermec.com
portugal@ermec.com

HS35A SELECTION GUIDE

H	S	3	5	A											

MODEL	PPR	LINE DRIVER	BORE OPTIONS	CONNECTOR OPTIONS	MOUNTING STYLE	PROTECTION	ANTI-ROTATION TETHER OPTION	CHANNELS	SPECIAL OPTIONS
HS35A	**G -** 100 **K -** 200 **L -** 240 **M -** 250 **Q -** 500 **R -** 512 **S -** 600 **W -** 1000 **Y -** 1024 **Z -** 1200 **3 -** 2000 **4 -** 2048 **5 -** 2500 **8 -** 4000 **D -** 4096 **9 -** 5000	**1 -** 5-28V (7272) **2 -** 5-28V, open collector (7273) **4 -** 5-28V in, 5V out (7272)	**0 -** Non-std. **B -** 1/2 **C -** 5/8” **D -** 3/4” **E -** 7/8” **F -** 1” **P -** 12mm **Q -** 14mm **R -** 15mm **S -** 16mm **V -** 19mm **W -** 20mm **Y -** 25mm **U -** Universal 1/2” to 7/8” (all U.S. inserts) **Z -** Universal 12mm to 20mm (all metric inserts)	See Table Below	**U -** Universal End-of-Shaft & Thru Shaft **X -** No rear cover	**0 -** None **1 -** Basket	**X -** None **A -** Fan cover, 1/4-20 **B -** Fan cover, 5/16-18 **C -** Fan cover, 3/8-16 **D -** Fan cover, all **E -** 4.5” or 6.75” C-Face **F -** 8.5” C-Face **M -** 4.5” C-Face or Fan Cover **N -** Marker pulse orienting tether **R -** Pin and block **U -** Universal (all tether options)	**A -** A,/A,B,/B,Z,/Z **B -** A,/A,B,/B« **D -** A,/A« **E -** A,B,Z« **F -** A,B«	**000 -** None **9xx -** Specify cable length xx=feet (use w/ option “W”) **Wxx -** Connector on cable xx=length in feet **W00 -** Conn on cable, 18”

« only available with MS 6 and 7 pin connectors

CONNECTOR OPTIONS					
10 Pin MS	**6 Pin MS**	**7 Pin MS**	**8 Pin M12**	**10 Pin Mini Twist Lock**	**Cable**
A - w/o plug (std. phasing) **B -** w/o plug (Dynapar HS35 phasing) **C -** “A” w/ plug **D -** “B” w/ plug	**E -** w/o plug (std. phasing) **F -** w/o plug (Dynapar HS35 phasing) **G -** “E” w/ plug **H -** “F” w/ plug	**J -** w/o plug (std. phasing) **K -** w/o plug (Dynapar HS35 phasing) **M -** “J” w/ plug **N -** “K” w/ plug	**T -** w/o plug (Turck Pinout) **U -** w/o plug (US Pinout)	**R -** 10 pin mini w/o plug **S -** 18" flex cable w/o plug*	**W -** 18” flex. cable **Y -** 18” flex. cable BEI wire colors

ERMEC, S.L. BARCELONA
C/ Francesc Teixidó, 22
08918 Badalona SPAIN
Tel. +34 902 450 160
info@ermec.com
www.ermec.com
ERMEC, S.L. - MADRID
C/ Puerto Rico, 4
28222 Majadahonda (Madrid) SPAIN
bilbao@ermec.com
portugal@ermec.com

HS35M ENCODER - Incremental - Magnetic - Hollow Shaft - Mill Duty

SPECIFICATIONS

Operating Power:
Volts: 5 - 24 VDC **Current:** 80 mA, no load
Output Format: A Quad B with marker (A, /A, B, /B, Z, /Z)
Frequency Range: 0 to 165 KHz
PPR: 1 - 3072 standard (for other PPR needs, consult factory)
Speed: 4700 RPM Max., (for higher speeds, consult factory)
Temperature: -20°C to 85°C
Environmental: IP65; NEMA 13 Rating
Vibration: 5-2000 Hz, 20 G
Shock: 50 G, 11 mS duration
Weight: Single: 1.4 lb [635 g] Dual: 2.0 lb [905 g]
Certifications: CE
Warranty: 2 Year No-Hassle

HS35M encoders fit shafts from 1/2" to 1 1/8" and 12mm to 30mm using a durable shaft insert. Models from 1/2" to 1" [12mm to 20mm] may be resized by replacing the insert, enabling our factory, distributors, and customer stockrooms to swiftly meet any need. The engineered composite housing is immune to most chemicals, and eliminates shaft current and grounding problems.

Avtron Encoders have superior shaft seals and bearings that stay sealed to keep out contamination caused by temperature cycling and liquid sprays. The HS35M offers high power outputs that can drive cables over 1000' [300m] with full short circuit and overvoltage protection!

The HS35M features two large bearings, one at each end of the enclosure for strength and resistance to damage. Many competitors use only a single bearing, or two tiny bearings side by side.

Often, optical encoders fail because of dust or water contamination that prevents the sensor from seeing the optical disk. The HS35M advanced magnetic technology sees through contamination and the fully sealed circuit design ensures your machine keeps working, even in mill environments.

The HS35M offers magnetic performance and moisture resistance, in a compact package, and for a great price. Select an HS35M Avtron Encoder and upgrade your machine today!

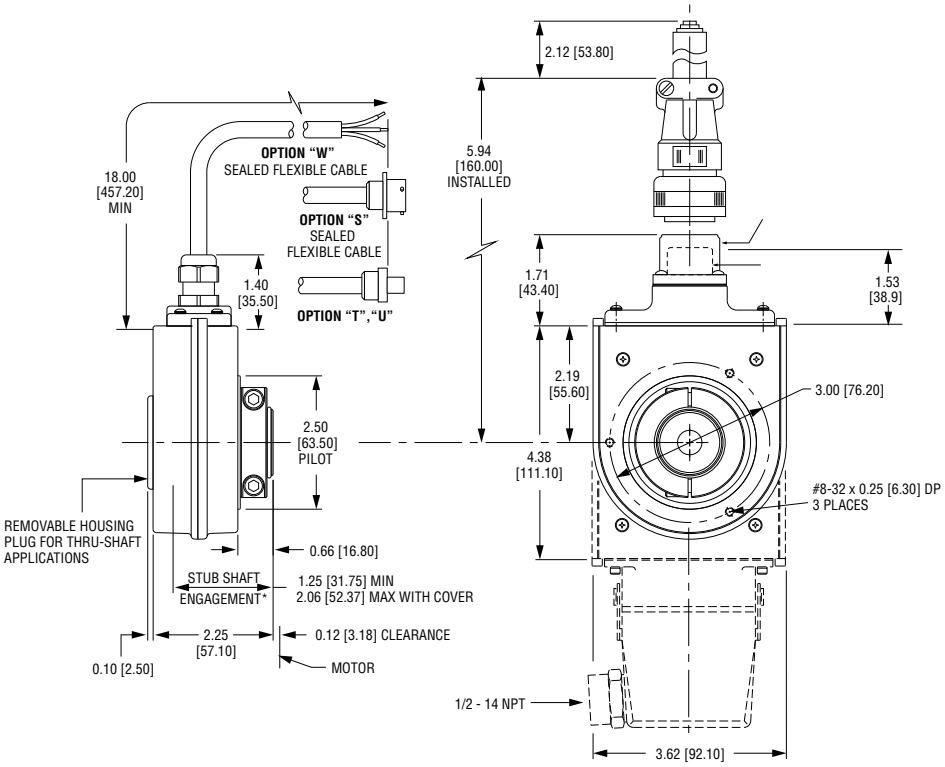

ERMEC
ERMEC, S.L. BARCELONA
C/ Francesc Teixidó, 22
08918 Badalona SPAIN
Tel. +34 902 450 160
info@ermec.com
www.ermec.com
ERMEC, S.L. - MADRID
C/ Puerto Rico, 4
28222 Majadahonda (Madrid) SPAIN
bilbao@ermec.com
portugal@ermec.com

HS35M SELECTION GUIDE

H	S	3	5	M											

MODEL	LEFT OUTPUT	RIGHT OUTPUT	LINE DRIVER	BORE OPTIONS	CONNECTOR OPTIONS	MOUNTING STYLE	PROTECTION	ANTI-ROTATION TETHER OPTION	CHANNELS	SPECIAL OPTIONS
HS35M	**F -** 60 **T -** 80 **G -** 100 **H -** 120 **K -** 200 **L -** 240 **M -** 250 **N -** 256 **P -** 300 **E -** 360 **Q -** 500 **R -** 512 **S -** 600 **U -** 720 **V -** 900 **W -** 1000 **Y -** 1024 **Z -** 1200 **1 -** 1250 **2 -** 1440 **B -** 1500 **3 -** 2000 **4 -** 2048 **5 -** 2500 **C -** 3072 **X -** None **0 -** Special "See Special PPR Table"	**F -** 60 **T -** 80 **G -** 100 **H -** 120 **K -** 200 **L -** 240 **M -** 250 **N -** 256 **P -** 300 **E -** 360 **Q -** 500 **R -** 512 **S -** 600 **U -** 720 **V -** 900 **W -** 1000 **Y -** 1024 **Z -** 1200 **1 -** 1250 **2 -** 1440 **B -** 1500 **3 -** 2000 **4 -** 2048 **5 -** 2500 **C -** 3072 **X -** None **0 -** Special "See Special PPR Table"	**6 -** 5-24V (7272) **8 -** 5-24V Hi-Power (Hx) **9 -** 5-24V in 5V out (7272)	See Table Below	See Table Below	**U -** Universal End-of-Shaft & Thru Shaft	**0 -** None **1 -** Basket**	See Table Below	**A -** A,/A,B,/B,Z,/Z **B -** A,/A,B,/B« **D -** A,/A« **E -** A,B,Z« **F -** A,B« **4 -** Custom PPR with all channels present **9 -** Custom length cable with all channels present	**00 -** None **0W -** Connector on 18" cable: See Table Below

* No insert used for Options "F", "G", "Y", "3" - ** Not applicable on dual output. - « Only available with 0W modification.

BORE OPTIONS						
0 - Non- Std. **B -** 1/2" **C -** 5/8"	**D -** 3/4" **E -** 7/8" **F -** 1"*	**G -** 1-1/8"* **P -** 12mm **Q -** 14mm	**R -** 15mm **S -** 16mm **V -** 19mm	**W -** 20mm **Y -** 25mm* **3 -** 30mm*	**U -** U.S. Universal (all inserts, 1/2"-1")	**Z -** Metric (all inserts, 12mm-20mm)

ANTI-ROTATION TETHER OPTION						
X - None **A -** Fan cover, 1/4-20 **B -** Fan cover, 5/16-18	**C -** Fan cover, 3/8-16 **D -** Fan cover, all **E -** 4.5" or 6.75" C-Face	**F -** 8.5" C-Face **G -** 12" [300mm] Threaded Rod Tether **H -** A&F Tether kits	**M -** 4.5" C-Face or Fan Cover **N -** Clamp for adjusting marker pulse position	**U -** Universal (all tether options, excluding "G")	**P -** 4.5" [115mm] Threaded Rod Tether, replaces Northstar HS35M, HSD35	**R -** Pin & Block

CONNECTOR OPTIONS						
Mounted on Encoder				12" Cable	18" Cable	
10 Pin MS	**10 Pin EPIC**	**10 Pin mini MS**	**12 Pin M23**	**10 Pin MS«**	**10 Pin«**	**Cable**
A - w/o plug (std. phasing) **B -** w/o plug (Dynapar HS35 phasing) **C -** "A" w/ plug **D -** "B" w/ plug	**P -** w/ plug **V -** w/o plug **L -** w/plug Leine & Linde Wiring **3 -** w/plug Hubner Wiring	**R -** w/plug	**2 -** w/o plug (L&L Hubner pinout)	**Y -** w/o plug	**S -** 10 pin mini w/plug **Q -** 10 Pin EPIC plug on remote base **Z -** EPIC w/plug	**W -** 18" flex cable **9 -** 18" flex cable - Hubner wiring

18" Cable «		
6 Pin MS	**7 Pin MS**	**8 Pin M12**
E - w/o plug (std. phasing) **F -** w/o plug (reverse phasing) **G -** w/ plug (std. phasing) **H -** w/ plug (reverse phasing)	**J -** w/o plug (std. phasing) **K -** w/o plug (reverse phasing) **M -** w/ plug (std. phasing) **N -** w/ plug (reverse phasing)	**T -** w/o plug (Turck Pinout) **U -** w/o plug (US Pinout)

SPECIAL PPR OPTION CODES		
OPTION CODE	**LEFT PPR**	**RIGHT PPR**
401	1270	None
402	150	None
403	50	None
404	512	16
405	16	None
406	6000	None
407	2800	None
408	1400	None
409	30	None
410	None	6000
411	1200	None
412	200	None
413	30	30
414	1500	None
415	3000	None
416	3600	None
417	1250	None
418	2400	2400
419	160	160
420	450	None

ERMEC
ERMEC, S.L. BARCELONA
C/ Francesc Teixidó, 22
08918 Badalona SPAIN
Tel. +34 902 450 160
info@ermec.com
www.ermec.com
ERMEC, S.L. - MADRID
C/ Puerto Rico, 4
28222 Majadahonda (Madrid) SPAIN
bilbao@ermec.com
portugal@ermec.com

AV32 BULLSEYE32™ ENCODER - Incremental - Magnetic - Hollow Shaft - Mill Duty

SPECIFICATIONS

Operating Power:
Volts: 5 - 24 VDC **Current:** 60 mA, no load
Output Format: A Quad B with gated marker (A, /A, B, /B, Z, /Z)
Frequency Range: 0 to 250 KHz
PPR: 32 - 5000
Mechanical:
Speed: 6000 RPM Max., (for higher speeds, consult factory)
Temperature: -40°C to 100°C
Environmental: IP65 Electronic Protection
Vibration: 5-2000 Hz
Shock: 50 G, 11 mS duration
Weight: 0.7 lb [350 g]
Warranty: 2 Year No-Hassle

Want a super-simple, ultra-reliable OEM encoder? Bullseye!

Bullseye32™ (AV32) Avtron Encoders eliminate the top culprits that cause encoder failures: there are no bearings, no seals, no optics, no glass disks! And they don't require expensive mounting flanges like other no-bearing encoders.

Bullseye32 mounts in seconds: Tighten the rotor clamp on the shaft, bolt the housing in place, and unlock the patented centering mechanism by removing the red end cap. Top it off with the shaft cap.

Bullseye32 is protected against dust, dirt and water. Why waste installation time protecting encoders with baskets? How about a Bullseye instead - it's tougher than most "protective baskets"! And Bullseye32 includes complete self-diagnostics, right down to the signal quality and wiring!

So if you are a motor, drive, or machine-builder OEM, switch to Bullseye32 and find out what a true revolution in encoding can do for you!

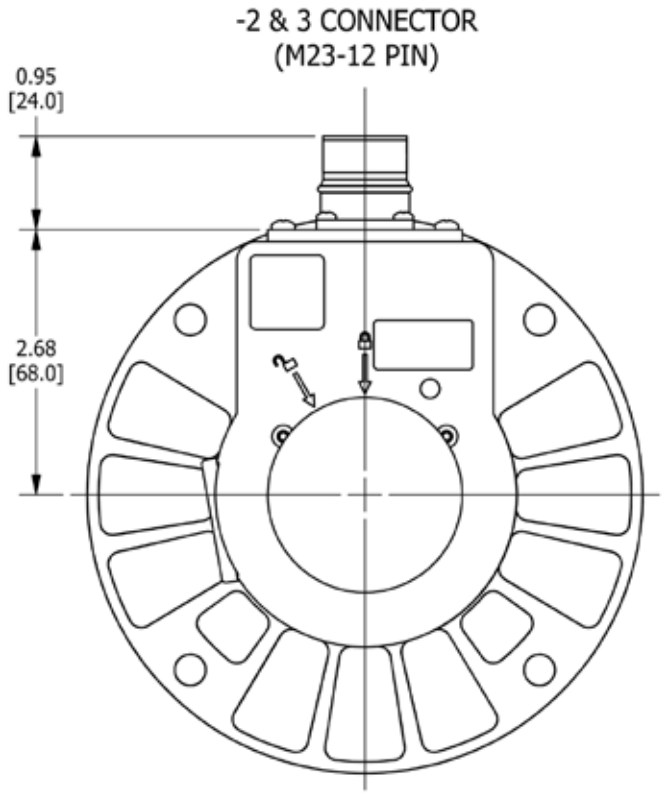

ERMEC
ERMEC, S.L. BARCELONA
C/ Francesc Teixidó, 22
08918 Badalona SPAIN
Tel. +34 902 450 160
info@ermec.com
www.ermec.com
ERMEC, S.L. - MADRID
C/ Puerto Rico, 4
28222 Majadahonda (Madrid) SPAIN
bilbao@ermec.com
portugal@ermec.com

AV32 SELECTION GUIDE

| A | V | 3 | 2 | | |

M3 LARGE-BORE ENCODER - Incremental - Optical - Hollow Shaft - Mill Duty

SPECIFICATIONS

Operating Power:

Volts: 5-24 VDC, 5-18 V, 12-24 V **Current:** 120 mA, no load

Output Format: A, /A, B, /B, C, /C Marker Z, /Z

Frequency Range: 0 to 150 KHz

PPR: 240-2500

Speed:

5000 RPM Max. Std., shafts 1 1/2” to 1 5/8”

3600 RPM Max. Std., shafts 2” to 2 3/8”

(for higher speeds, consult factory)

Temperature: -40°C* to 85°C

Chemical: Polyurethane enamel paint protects against salt spray, mild acids, and bases

Weight: 7 lb [3.2 kg]

Warranty: 1 Year No-Hassle

*-20°C standard

M3 large bore hollow shaft mill duty optical hollow shaft Avtron Encoders fit motors or load shafts from 1 1/2” to 2 3/8” [48mm-60mm].

Looking for solid shaft M3-1 and M3-2 models or small-bore M3 models? Use our cross reference page to replace these models with the latest Avtron Encoders models.

Forget tiny hollow shaft encoders that require shaft reduction and special protection! M3 mill duty encoders can accommodate up to a 2 3/8” shaft directly and are designed for use in rougher applications than ordinary optical encoders.
M3 has bigger bearings than light duty and commercial grade encoders to withstand more shaft vibration and stress. M3 encoders are designed with bigger, heavy-duty seals to keep contamination out of the encoder and keep your machines working.
M3 encoders offer a large variety of connector and mounting options to replace virtually any existing encoder or tachometer. When you install an M3 Avtron Encoder, you’ve upgraded to the most durable optical encoder available anywhere!

Also available: Heavy mill duty HS45 and severe duty AV685 encoders.

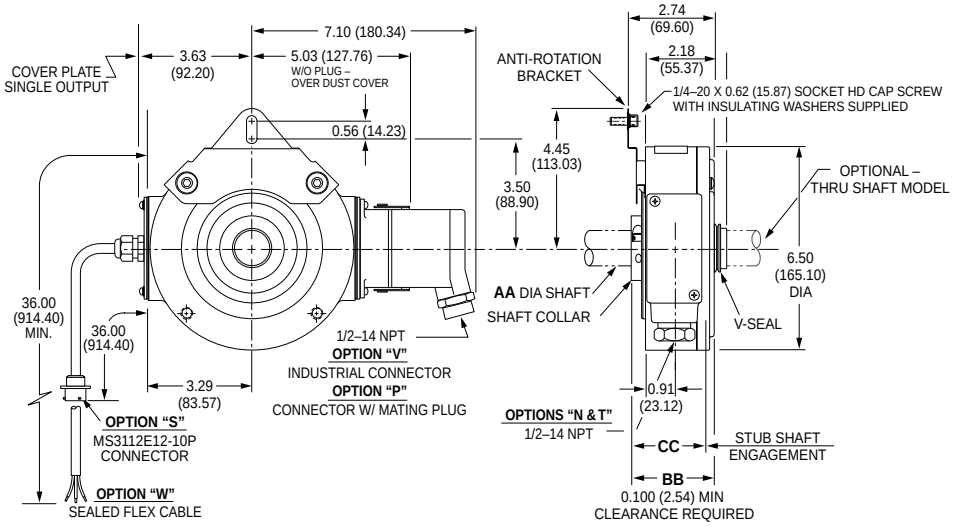

ERMEC
ERMEC, S.L. BARCELONA
C/ Francesc Teixidó, 22
08918 Badalona SPAIN
Tel. +34 902 450 160
info@ermec.com
www.ermec.com
ERMEC, S.L. - MADRID
C/ Puerto Rico, 4
28222 Majadahonda (Madrid) SPAIN
bilbao@ermec.com
portugal@ermec.com

M3 SELECTION GUIDE

M	3	-								

MODEL	BORE SIZE	MOUNTING STYLE	LINE DRIVER	OUTPUT LOCATION	PPR	CONNECTOR	SPECIAL OPTIONS
M3-	**0 -** Non-Standard **6 -** 2” **7 -** 2 3/8” **8 -** 1 1/2” **9 -** 1 5/8” **D -** 52mm **E -** 58mm **G -** 48mm **K -** 50mm **H -** 60mm **J -** 2-1/8”	**S -** Std. Stub Shaft **T -** Thru shaft w/ V-Ring Seal **G -** Shaft Grounding	**1 -** 5 to 24 VDC **2 -** 5 to 18 VDC **3 -** 18 to 24 VDC **4 -** 5 to 24 V in, 5 V out	**R -** Right **L -** Left **D -** Dual	80 120 180 240 256 360 480 500 512 600 1024 1200 2000 2048 2500	See Table Below	**000 -** None **003 -** 12” Threaded Rod Torque Arm Kit **005 - -**40° C Rating **008 -** 4.5” C-Face Mount Bracket **009 -** Northstar Pinout **015 -** SAE Size Stainless Steel Shaft **016 -** 8.5” C-Face Mount **042 -** 4.5” + 8.5” mounting brackets, Finger Guard Kit

CONNECTOR								
Mounted on Encoder			M940 Replacement	M737A Replacement	M727A Replacement	18” Cable	Conduit Box	3 ft. Flex. Cable
10 Pin MS	10 Pin MS mini	10 Pin EPIC	6 Pin MS	5 Pin MS	5 Pin MS	10 Pin EPIC		
A - without Plug$_s$ **B -** with Flex. Conduit Adapter$_s$ **C -** with Plug$_s$ **G -** 10 pins w/plug **K -** with Flex. conduit$_b$ **L -** with Plug$_b$ **M -** without Plug$_b$	**R -** Baldor Twist Lock w/o plug **S -** Baldor Twist Lock on 3 ft. Pigtail	**P -** with Plug **V -** without Plug	**D -** with Plug$_b$	**E -** without Plug$_s$ **F -** with Plug$_s$	**H -** without Plug$_s$ **J -** with Plug$_s$	**Q -** with plug and adaptor block	**N -** with color coded leads **T -** with Terminal Block	**W -** Sealed, Pigtail **X -** Sealed, Industrial Connector without Plug **Z -** Sealed, Industrial Connector with Plug

s - Side Exit b - Bottom Exit

ERMEC, S.L. BARCELONA
C/ Francesc Teixidó, 22
08918 Badalona SPAIN
Tel. +34 902 450 160
info@ermec.com
www.ermec.com
ERMEC, S.L. - MADRID
C/ Puerto Rico, 4
28222 Majadahonda (Madrid) SPAIN
bilbao@ermec.com
portugal@ermec.com

M4 LARGE-BORE ENCODER - Incremental - Optical - Hollow Shaft - Heavy Mill Duty

SPECIFICATIONS

Operating Power:

Volts: 5-24 VDC, 5-18 V, 12-24 V **Current:** 120 mA, no load

Output Format: A, /A, B, /B Optional Marker Z, /Z

Frequency Range: 0 to 100 KHz

PPR: 240-1200

Speed:

5000 RPM Max. Std., shafts 1 1/2" to 1 5/8" [38 mm-41 mm]

3600 RPM Max. Std., shafts 2" to 2 3/8" [48 mm-60 mm]

(for higher speeds, consult factory)

Temperature: -40°C* to 85°C

Chemical: Polyurethane enamel paint protects against salt spray, mild acids, and bases

Weight: 7 lb [3.2 kg]

Warranty: 1 Year No-Hassle

*-20°C standard

M4 large bore heavy mill duty magnetic hollow shaft encoders fit motor or load shafts from 1 1/2" to 2 3/8" [48-60mm]. Looking for M4-1 or M4-2 or small-bore M4 models--these have been replaced by AV485 and HS45 upgrade models respectively. Use our cross reference page for these models.

Forget tiny hollow shaft optical units that require shaft reduction and special protection! M4 magnetic heavy duty encoders can accommodate up to a 2 3/8" shaft directly and are designed for use in mill environments with water, oil, moisture, dust, and dirt.
The M4 magnetic sensor system is far more durable than optical sensors. M4 encoders offer a large variety of connector and mounting options to replace virtually any existing encoder or tachometer. Upgrade to an M4 encoder for maximum uptime!

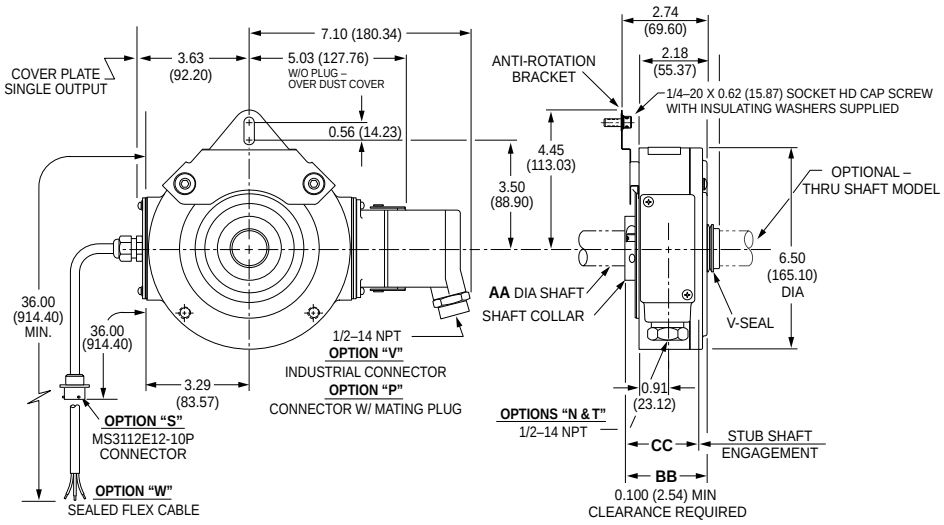

ERMEC
ERMEC, S.L. BARCELONA
C/ Francesc Teixidó, 22
08918 Badalona SPAIN
Tel. +34 902 450 160
info@ermec.com
www.ermec.com
ERMEC, S.L. - MADRID
C/ Puerto Rico, 4
28222 Majadahonda (Madrid) SPAIN
bilbao@ermec.com
portugal@ermec.com

M4 SELECTION GUIDE

M	4	-									

MODEL	BORE SIZE	MOUNTING STYLE	LINE DRIVER	LEFT OUTPUT	RIGHT OUTPUT	PPR	MARKER PULSE	CONNECTOR	SPECIAL OPTIONS
M4	**0 -** Non-Standard **8 -** 1 1/2” **9 -** 1 5/8” **6 -** 2” **J -** 2 1/8” **7 -** 2 3/8” **G -** 48 mm **K -** 50mm **D -** 52mm **E -** 58mm **H -** 60mm	**S -** Std. Stub Shaft **T -** Thru shaft w/ V-Ring Seal **G -** Shaft Grounding	**8 -** 6 to 30 Hi-Power (Hx)	**X -** None **L -** Low (Base PPR/2) **M -** Medium (Base PPR) **H -** High (Base PPR x 2)	**X -** None **L -** Low (Base PPR/2) **M -** Medium (Base PPR) **H -** High (Base PPR x 2)	**48 -** 480 **51 -** 512 **60 -** 600	**Z -** Marker Pulse **- -** No Marker Pulse	See Table Below	**000 -** None **003 -** Torque Arm Mount **005 -** -40° C Rating **008 -** 4.5” C-Face Mount **009 -** Northstar Pinout **015 -** Stainless Steel Shaft **016 -** 8.5” C-Face Mount **028 -** 12.5” C-Face Mount

CONNECTOR								
Mounted on Encoder			M940 Replacement	M737A Replacement	M727A Replacement	18” Cable	Conduit Box	3 ft. Flex. Cable
10 Pin MS	**10 Pin MS mini**	**10 Pin EPIC**	**6 Pin MS**	**5 Pin MS**	**5 Pin MS**	**10 Pin EPIC**		
A - without Plug$_s$ **B -** with Flex. Conduit Adapter$_s$ **C -** with Plug$_s$ **G -** 10 pins w/plug **K -** with Flex. conduit$_b$ **L -** with Plug$_b$ **M -** without Plug$_b$	**R -** Baldor Twist Lock w/o plug **S -** Baldor Twist Lock on 3 ft. Pigtail	**P -** with Plug **V -** without Plug	**D -** with Plug$_s$	**E -** without Plug$_s$ **F -** with Plug$_s$	**H -** without Plug$_s$ **J -** with Plug$_s$	**Q -** with plud and adaptor block	**N -** with color coded leads **T -** with Terminal Block	**W -** Sealed, Pigtail **X -** Sealed, Industrial Connector without Plug **Z -** Sealed, Industrial Connector with Plug

s - Side Exit b - Bottom Exit

ERMEC, S.L. BARCELONA
C/ Francesc Teixidó, 22
08918 Badalona SPAIN
Tel. +34 902 450 160
info@ermec.com
www.ermec.com
ERMEC, S.L. - MADRID
C/ Puerto Rico, 4
28222 Majadahonda (Madrid) SPAIN
bilbao@ermec.com
portugal@ermec.com

M7 ULTRA-LOW TEMPERATURE ENCODER - Incremental - Magnetic - Hollow Shaft - Heavy Mill Duty

SPECIFICATIONS

Operating Power:

Volts: 5-24 VDC **Current:** 120 mA per output, no load 24 VDC

770 mA @24 VDC heater current required for operation below -40°C

Output Format: A, /A, B, /B Optional Marker Z, /Z

Frequency Range: 0 to 100 KHz

PPR: 240-1200

Speed: 5000 RPM Max. Std., 1” to 1 1/8” shaft

Temperature: -45°C to 80°C (internal heater option required below -40°C)

Chemical: Polyurethane enamel paint protects against salt spray, mild acids, and bases

Weight: 16 lb [7 kg]

Warranty: 1 Year No-Hassle

M7 Hollow Shaft Magnetic Hollow Shaft Mount Encoder, 1” or 1 1/8”

M7-4 and M7-5 heavy mill duty encoders are designed for direct mounting on motor or load shafts, from 1” to 1 1/8”.

Forget fragile glass disk encoders! The M7 features Avtron Encoders’ rugged magnetic sensor and solid metal rotor technology. Our shatterproof, moisture proof systems ensure your application has maximum uptime.

No more tiny stub shafts on big motors or load shafts! The hollow shaft (tethered) models offer direct mounting on big shafts, 1” or 1 1/8”, without flanges, reducers, couplings, or other hardware. No rework is needed; just mount the encoder directly on the shaft, and secure the tether arm. The heavy duty bearings withstand runout and vibration that destroy lesser encoders.

If you have a rough application in a cold location, select an M7 encoder!

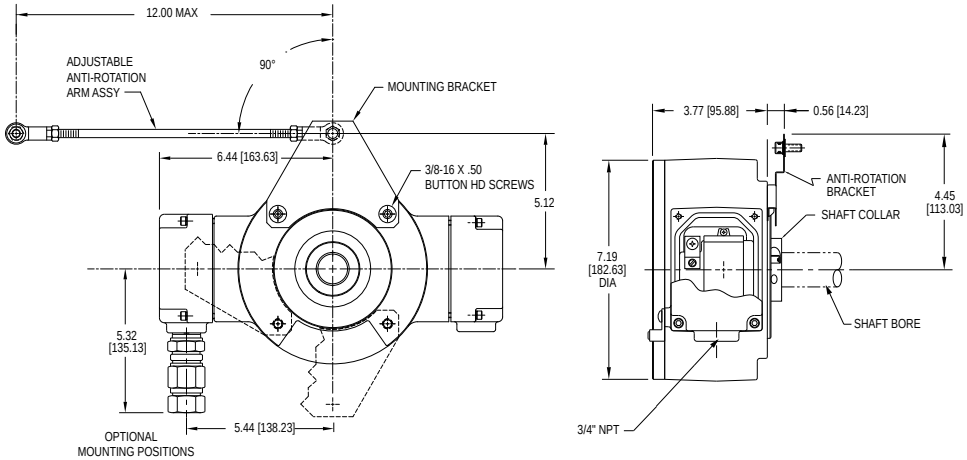

ERMEC, S.L. BARCELONA
C/ Francesc Teixidó, 22
08918 Badalona SPAIN
Tel. +34 902 450 160
info@ermec.com
www.ermec.com
ERMEC, S.L. - MADRID
C/ Puerto Rico, 4
28222 Majadahonda (Madrid) SPAIN
bilbao@ermec.com
portugal@ermec.com

M7 SELECTION GUIDE

M	7	-									

MODEL	BORE SIZE	MOUNTING STYLE	LINE DRIVER	LEFT OUTPUT	RIGHT OUTPUT	PPR	MARKER	CONNECTOR	SPECIAL OPTIONS
M7	**0 -** Non-Standard **4 -** 1” **5 -** 1 1/8”	**S-** End-of-shaft	**3 -** 12 to 24 VDC	**X -** None **L -** Low (Base PPR/2) **M -** Medium (Base PPR) **H -** High (Base PPR x 2)	**X -** None **L -** Low (Base PPR/2) **M -** Medium (Base PPR) **H -** High (Base PPR x 2)	**48 -** 480 **51 -** 512 **60 -** 600	**Z -** Marker **- -** None	**T -** Conduit Box, Terminal Block, 3/4” NPT **W -** Conduit Box, Terminal Block and Wire Gland	**000 -** None

	AVAILABLE RESOLUTIONS		
	-48 OPTION	**-51 OPTION**	**-60 OPTION**
LOW	240	256	300
MEDIUM	480	512	600
HIGH	960	1024	1200

ERMEC
ERMEC, S.L. BARCELONA
C/ Francesc Teixidó, 22
08918 Badalona SPAIN
Tel. +34 902 450 160
info@ermec.com
www.ermec.com
ERMEC, S.L. - MADRID
C/ Puerto Rico, 4
28222 Majadahonda (Madrid) SPAIN
bilbao@ermec.com
portugal@ermec.com

HS44 ENCODER - Incremental - Magnetic - Hollow Shaft - Heavy Mill Duty

SPECIFICATIONS

Operating Power:
Volts: 6-30 VDC **Current:** 80 mA, no load
Output Format: A Quad B with marker (A, /A, B, /B, Z, /Z)
Frequency Range: 0 to 250 KHz @ 6 V & 1 m cable
PPR: 1 - 10000 standard (for other PPR needs, consult factory)
Speed: 6000 RPM Max., (for higher speeds, consult factory)
Temperature: -30°C to 85°C std, *optional: -40°C to 100°C
Environmental: IP66 housing with fully encapsulated electronics
Shaft Current Isolation: *2700 V RMS optional ceramic bearings
Vibration: 10-2000 Hz, 17 G
Shock: 275 G, 6 mS duration
Weight: 2.5 lb [635 g] approx
Certifications: CE, UL 508 (pending)
* Optional Feature

The HS44 offers high performance, magnetic durability and moisture resistance in a compact package with drop-in ease of replacement at a great value.

Avtron HS44 encoders are a direct fit for 12mm, 16mm and 17mm (10:1 taper) generator (and motor) center-bolt shaft systems.

The optional ceramic bearings offer high voltage isolation from shaft currents.

The HS44 is engineered to be a drop-in replacement for Baumer Hubner HOG 8, & 9 models,as well as Leine & Linde 861,862 & 865 models. And it adds superior durability and diagnostics!

The HS44 offers high power outputs that can drive cables up to 1000' [300m] with full short circuit and over-voltage protection!

On-board diagnostics check all aspects of the encoder - from the sensor to the output line driver circuit - and provide a clear indicator that the encoder is working well. No more fumbling with a PC or oscilloscope to determine if your encoder is working properly!

Often, optical encoders fail because of dust or water contamination that prevents the sensor from seeing the optical disk. The HS44 advanced magnetic technology sees through contamination. The fully potted circuit board that ignores water, oil, dust and dirt. This ensures your machine keeps working, even in the toughest application environments.

Select an Avtron HS44 and upgrade your machine today!

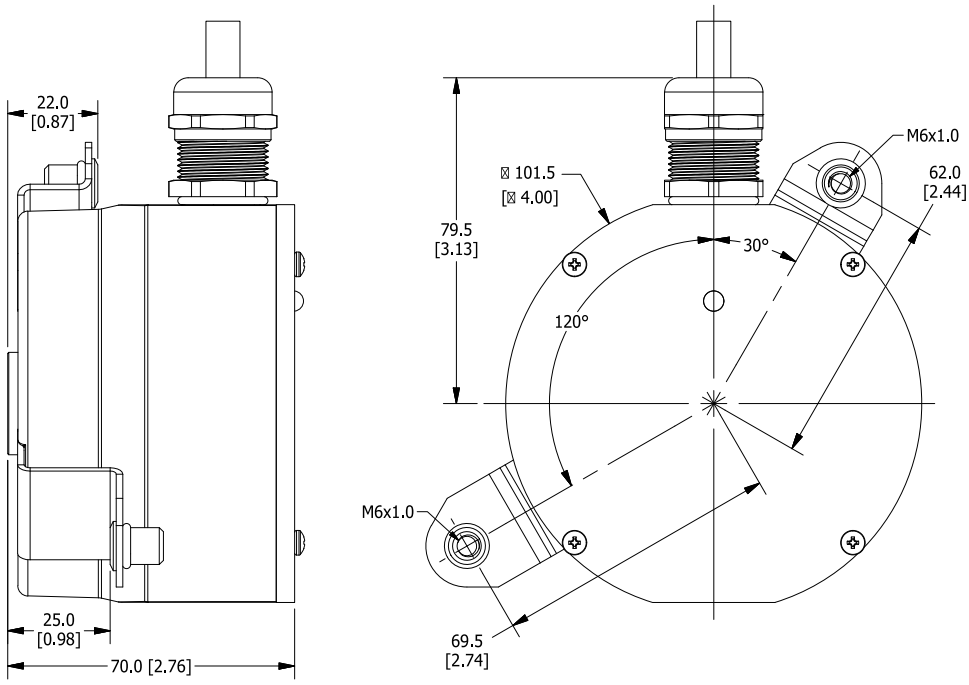

ERMEC
ERMEC, S.L. BARCELONA
C/ Francesc Teixidó, 22
08918 Badalona SPAIN
Tel. +34 902 450 160
info@ermec.com
www.ermec.com
ERMEC, S.L. - MADRID
C/ Puerto Rico, 4
28222 Majadahonda (Madrid) SPAIN
bilbao@ermec.com
portugal@ermec.com

HS44 SELECTION GUIDE

H	S	4	4									X	X			

MODEL	SHAFT	TETHER	CONNECTOR	MARKER GATING	LINE DRIVER	PPR (SINGLE)	PPR (DUAL)	MODS
HS44	**2 -** 12mm End-of-Shaft (EOS) Straight; Standard Bearings **6 -** 16mm EOS Straight; Std Bearings **7 -** 17mm EOS 10:1 Taper; Std Bearings **B -** 12mm End- of-Shaft (EOS) Straight; Ceramic Bearings **F -** 16mm EOS Straight; Ceramic Bearings **G -** 17mm EOS 10:1 Taper; Ceramic Bearings	**X -** No Tether **1 -** Bracket Only 120°(25mm from shaft to inboard mount) **2 -** Bracket Only 330°(22mm from shaft to outboard mount)	**2 -** M23/12pin (CW pin#s) Standard Phasing **3 -** M23/12pin (CW pin #s) Reverse Phasing **4 -** M23/12pin (CCW pin#s) Standard Phasing **5 -** M23/12pin (CCW pin #s) Reverse Phasing **T -** w/o plug (Turck Pinout) M12/8pin **U -** w/o plug (US Pinout) M12/8pin **W -** M20 Cord Grip w/ 0.5M (20") Cable **Y -** M20 Cord Grip w/o Cable	**K -** ¼ AB Cycle, Sync w/A&B High **L -** ½ AB Cycle, Sync w/B Low **M-** 1 AB Cycle, Sync w/A High **U -** Ungated Wide Marker	**1 -** 6-30V in/out Hi-Power (Hx) **2 -** 6-30V in/5V out Hi-Power (Hx) **3 -** 5V in/out Hi-Power (Hx)	**AM -** 250 **AN -** 256 **AQ -** 500 **AR -** 512 **AW -** 1000 **AY -** 1024 **CX -** 1500 **A3 -** 2000 **A4 -** 2048 **A5 -** 2500 **AT -** 3072 **AD -** 4096 **A9 -** 5000 **A2 -** 8192 **K1 -** 10000 *Contact Factory for Additional PPRs	**XX -** None If Dual, PPR = Codes same as single	**000 -** No Special Mod **068 -** Fault Output **069 -** 250mm grounding strip **070 -** Expanded Temp Range (-40°C to 100°C) **9XX -** Cable Length Mod^ **TXX -** Anti-Rotation Arm Length*

* Anti-Rotation Arem length =XXmm/10; in 10mm increments ^Custom Cable Length in meters; whole meter increments up to 99m

ERMEC, S.L. BARCELONA
C/ Francesc Teixidó, 22
08918 Badalona SPAIN
Tel. +34 902 450 160
info@ermec.com
www.ermec.com
ERMEC, S.L. - MADRID
C/ Puerto Rico, 4
28222 Majadahonda (Madrid) SPAIN
bilbao@ermec.com
portugal@ermec.com

HS45 ENCODER - Incremental - Magnetic - Hollow Shaft - Heavy Mill Duty

SPECIFICATIONS

Operating Power:
Volts: 5-24 VDC **Current:** 100 mA, no load
Output Format: A Quad B with marker (A, /A, B, /B, Z, /Z)
Second Isolated Output: Optional
Frequency Range: 0 to 165 KHz
PPR: 8-25000
Speed: 5000 RPM Max. std., for higher speeds, consult factory
Enclosure: IP65
Electronics: Fully Encapsulated, IP67
Temperature: -40°C to +100°C
Vibration: 18 G
Shock: 100 G
Weight: 10-12 lb [4.5 - 5.5 kg]
Chemical: Polyurethane enamel paint protects against salt spray, mild acids, and bases.
Warranty: 3 Year No-Hassle

HS45 EU-SMART encoders are magnetic, hollow shaft, heavy duty encoders (incremental rotary quadrature encoders) for any mounting application including NEMA motors (incl. GE, Marathon, US Motors) and European-style motors such as ABB and Siemens. Also available: AV45 solid shaft encoder to fit European B10 flanges (85mm), and foot mount applications and severe duty AV685 encoders.

The HS45 offers clamp-style and (rear) center-bolt mounting options. Clamp-style fits shafts from 5/8" to 1 1/8" [16mm-30mm]; center-bolt mounting is available for 16mm (straight) and 17mm (cone/taper shaft). Clamp-style mounting utilizes a convenient field-changable sizing sleeve and provides shaft current isolation. Center-bolt styles feature insulated ceramic ball bearings to prevent shaft current damage.

The HS45 is designed for use in rough environments with constant exposure to temperature extremes, water, oil, and dirt. Its high-power output circuits with universal 5-24V power are fully protected against surges and wiring errors. The onboard diagnostics warn of any signal quality issues before these problems cause downtime on your machine.

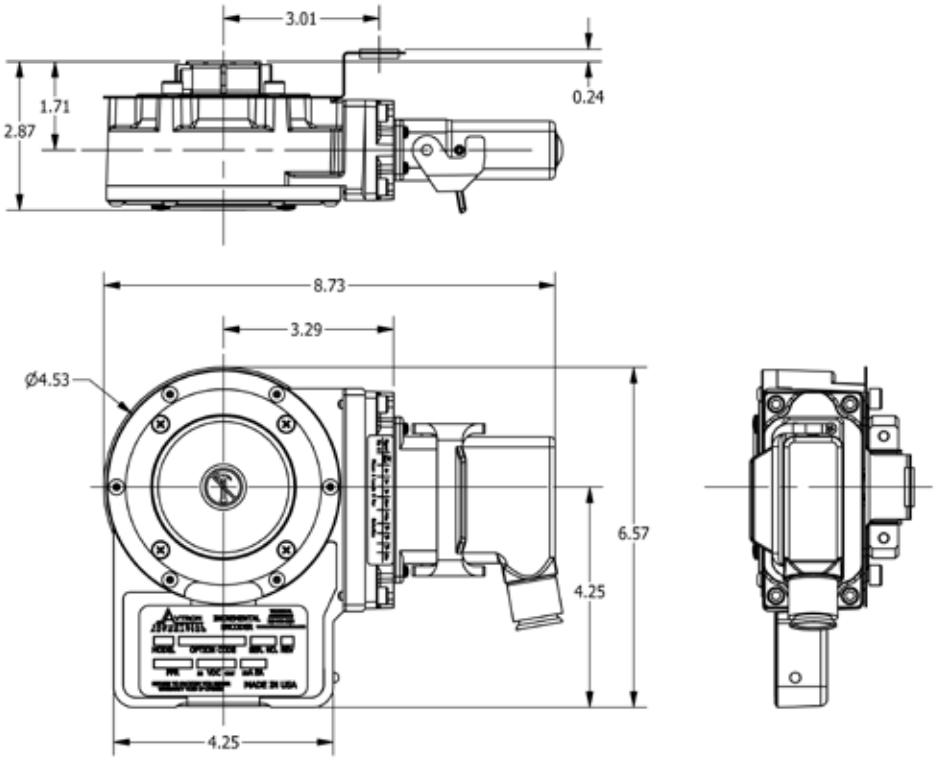

ERMEC
ERMEC, S.L. BARCELONA
C/ Francesc Teixidó, 22
08918 Badalona SPAIN
Tel. +34 902 450 160
info@ermec.com
www.ermec.com
ERMEC, S.L. - MADRID
C/ Puerto Rico, 4
28222 Majadahonda (Madrid) SPAIN
bilbao@ermec.com
portugal@ermec.com

HS45 SELECTION GUIDE

H	S	4	5																	

MODEL	BORE SIZE	LEFT OUTPUT PPR	RIGHT OUTPUT PPR	LINE DRIVER	CONNECTOR OPTIONS	TETHER	CHANNELS	SPECIAL OPTIONS
HS45	**Clamping Collar Mount U.S.** **C -** 5/8" **D -** 3/4" **E -** 7/8" **F -** 1" **G -** 1 1/8 **U -** All US Sizes **K -** 1.375' **N -** 1.118" **Clamping Collar Mount Metric** **S -** 16mm **T -** 18mm **V -** 19mm **W -** 20mm **Y -** 25mm **3 -** 30mm **Z -** All Metric Sizes **End of Shaft: Center Bolt Mount** **L -** 16mm (no taper) **M -** 17mm (10:1 taper) **P -** 20mm **J -** 30mm	**XX -** None **BC -** 50 **AF -** 60 **AK -** 80 **AG -** 100 **AH -** 120 **AA -** 128 **AM -** 200 **AL -** 240 **AN -** 256 **AP -** 300 **AE -** 360 **AC -** 400 **AB -** 480 **AQ -** 500 **AR -** 512 **AS -** 600 **AU -** 720 **AV -** 900 **AJ -** 960 **AW -** 1000 **AY -** 1024 **AZ -** 1200 **CX -** 1500 **A3 -** 2000 **A4 -** 2048 **A5 -** 2500 **AT -** 3072 **A7 -** 3600 **AD -** 4096 **A8 -** 4800 **A9 -** 5000 **A0 -** Special	**XX -** None **BC -** 50 **AF -** 60 **AK -** 80 **AG -** 100 **AH -** 120 **AA -** 128 **AM -** 200 **AL -** 240 **AN -** 256 **AP -** 300 **AE -** 360 **AC -** 400 **AB -** 480 **AQ -** 500 **AR -** 512 **AS -** 600 **AU -** 720 **AV -** 900 **AJ -** 960 **AW -** 1000 **AY -** 1024 **AZ -** 1200 **CX -** 1500 **A3 -** 2000 **A4 -** 2048 **A5 -** 2500 **AT -** 3072 **A7 -** 3600 **AD -** 4096 **A8 -** 4800 **A9 -** 5000 **A0 -** Special	**6 -** 5-24V in, 5-24V out* **8 -** 5-24V in, 5-24 out hi-power **9 -** 5-24V in, 5V fixed out ***Recommended for single-ended applications**	See Table Below	See Table Below	**A -** A,B,/A,/B,Z,/Z (req'd for 8, 10 pin connectors) **For 6,7 pin conns only** **B -** A,B,/A,/B (no marker) **E -** A,B,Z (single ended) **F -** A,B (single ended, no marker) **D -** A, /A,	**000 -** None **004 -** Super Magnetic Shielding **500 -** Add 100C temperature range to shaft bores 5/8-1" and 16mm-25mm **6xx -** Add over speed switch xx=speed code **9xx -** Specify cable length xx=feet max 33ft (use w/ Option "Q","W", "Z")

* Anti-Rotation Arem length =XXmm/10; in 10mm increments ^Custom Cable Length in meters; whole meter increments up to 99m

CONNECTOR OPTIONS									
Mounted on Encoder							12" Cable	18" Cable	
10 Pin MS	10 Pin EPIC	10 Pin mini MS	12 Pin M23	6 Pin MS	7 Pin MS	8 Pin M12	10 Pin MS	10 Pin mini MS	10 Pin EPIC
A - w/o plug (std. phasing) **B -** w/o plug (Dynapar HS35 phasing) **C -** "A" w/ plug **D -** "B" w/ plug **4 -** w/o plug (M3/M4 Pinout)	**P -** w/ plug **G -** w/ plug (Northstar pinout)	**R -** w/ plug **N -** w/o plug (reverse phasing) **V -** w/ plug (reverse phasing)	**2 -** w/o plug (L&L pinout) **3 -** w/o plug (Hubner pinout)	**E -** w/ plug **F -** w/ plug (Dynapar phasing)	**J -** w/ plug **K -** w/ plug (Dynapar phasing)	**T -** w/o plug (Turk Pinout **U -** w/o plug (U.S. Pinout)	**Y -** w/ plug	**S -** w/ plug	**Q -** w/ plug on adaptor block **Z -** w/ plug base mounted **1 -** Base mounted

Other		
7 Pin MS	3' Cable	Conduit Box
M - 4' Cable w/o plug	**W -** Cable w/ flying leads	**H -** w/ terminal strip **L -** w/ terminal strip & cord grip **5 -** w/ terminal strip (Hubner Pinout

TETHER						
Fan Covers	C-Face Mounting	Threaded Rod Styles	Combinations	Dual/Ganged Encoders	Adaptor Flange	No Tether
A - Fan Cover 1/4" mount **D -** Fan Cover (T-bolt)	**E -** 4.5" NEMA C-face **F -** 8.5" NEMA FC-face	**G -** 70-500mm w/bracket **P -** 70mm fixed w/screw **T -** 70-500mm w/T-bolt	**H -** Fan Cover & 8.5" C-face **M -** Fan Cover & 4.5" C-Face **U-** Universal (includes all styles)	**Y-** Tether 2nd encoder to 1st (select any tether from above list for first encoder)	**2 -** 68mm tapered pilot (end of shaft only)	**X -** None

ERMEC
ERMEC, S.L. BARCELONA
C/ Francesc Teixidó, 22
08918 Badalona SPAIN
Tel. +34 902 450 160
info@ermec.com
www.ermec.com
ERMEC, S.L. - MADRID
C/ Puerto Rico, 4
28222 Majadahonda (Madrid) SPAIN
bilbao@ermec.com
portugal@ermec.com

AV56A THIN-LINE III™ ENCODER - Incremental - Magnetic - Hollow Shaft - Heavy Mill Duty

SPECIFICATIONS

Operating Power:
Volts: 5 - 24 VDC **Current:** 100 mA, no load
Output Format: A Quad B with Marker (A, /A, B, /B, Z, /Z)
Second Isolated Output: Optional
Frequency Range: @5 V, @1 m cable, 250 kHz Max @24 V, @300 m cable, #8 output, 45 kHz Max
Maximum Cable Length: 1000'
PPR: 4 - 50000
Speed: 5400 RPM Max. std., for higher speeds, consult factory
Electronics: Fully Encapsulated, IP67 (see manual for details)
Temperature: -40°C to 100°C (150°C rotor - Intermittent)
Vibration: 18 G
Shock: 1 meter drop test
Chemical: Polyurethane enamel paint protects against salt spray, mild acids, and bases.
Weight: 2 - 3 lb [0.9 - 1.36 kg]
Warranty: 3 Year No-Hassle

AV56A THIN-LINE III™ heavy mill duty modular magnetic encoders fit standard 4.5" C-Face motors such as Marathon Blue and Black Max, as well as Baldor Reliance models. The stainless steel AV56S is designed for washdown and marine duty. Other THIN-LINE III™ models, ranging from 115mm to 8.5", are available to fit other motor sizes.

First, the magnetic sensors are fully potted, to withstand dirt and liquids. No glass disks, no optics to clog. There are no moving, wearing parts!

The patented Wide-Gap™ Cam Screw Rotors™ put an end to sensor damage, are simpler to install, and stay securely mounted to the shaft.

The universal 5-24V design drives longer cables and is protected against wiring errors and surges.

With a real-world installation history of over 4,500,000 hour MTBF, AV56 encoders will keep your machine running 24/7/365!

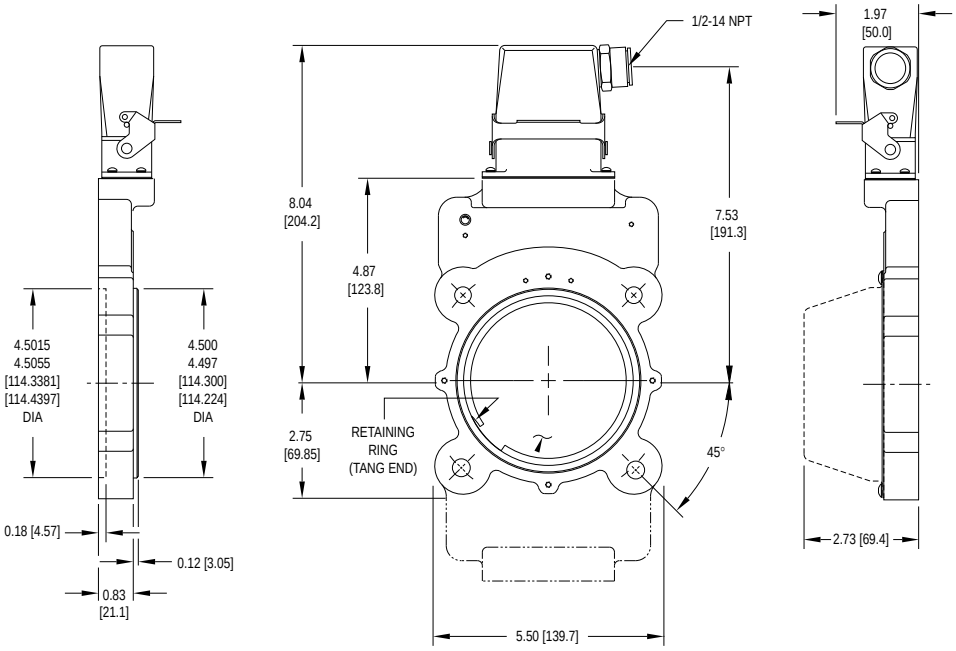

ERMEC
ERMEC, S.L. BARCELONA
C/ Francesc Teixidó, 22
08918 Badalona SPAIN
Tel. +34 902 450 160
info@ermec.com
www.ermec.com
ERMEC, S.L. - MADRID
C/ Puerto Rico, 4
28222 Majadahonda (Madrid) SPAIN
bilbao@ermec.com
portugal@ermec.com

AV56A SELECTION GUIDE

A	V	5	6	A																			

MODEL	HOUSING TYPE	ROTOR CODE		COVER STYLE	LINE DRIVER	LEFT OUTPUT PPR	RIGHT OUTPUT PPR	CONNECTOR	SPECIAL OPTIONS
AV56A	**1 -** Single Output **2 -** Dual Output	**C0 -** Non-std. Shaft Size **XX -** None **US** **CA -** 0.500 **CB -** 0.625 **CC -** 0.875 **CD -** 0.938 **CE -** 1.000 **C3 -** 1.112 **CF -** 1.125 **EZ -** 1.188 **CG -** 1.250 **CH -** 1.375 **CT -** 1.500 **CJ -** 1.625 **CK -** 1.750 **CL -** 1.875 **CM -** 2.000 **CN -** 2.125 **CQ -** 2.250 **CP -** 2.375 **CR -** 2.500 **TS -** 2.625* **TW -** 2.750* **TU -** 2.875* **TV -** 3.000* **T4 -** 3.125* **T7 -** 3.188* **TZ -** 3.250* **KD -** 0.938** **KF -** 1.125**	**C0 -** Non-std. Shaft Size **XX -** None **Metric** **D2** - 10mm **DA** - 11mm **D3** - 12mm **DB** - 14mm **DC** - 15mm **DD** - 16mm **D4** - 18mm **DE** - 19mm **D7** - 20mm **DF** - 24mm **D5** - 25mm **DG** - 28mm **DH** - 30mm **DT** - 32mm **DJ** - 36mm **DK** - 38mm **DL** - 42mm **DM** - 45mm **DN** - 48mm **DP** - 52mm **DR** - 55mm **DS** - 60mm **MU** - 65mm* **MV** - 70mm* **MW** - 75mm* **MY** - 80mm* **MZ** - 85mm*	**E -** Extended shaft cover **F -** Flat cover **T -** Flat thru-hole cover with shaft seal **D -** Dome cover **G -** Extended cover w/gasket **X -** No cover	**6 -** 5-24V in/out (7272) **8 -** 5-24 V in/out high power (hx) **9 -** 5-24V in, 5V out (7272)	**0 -** Non-std. **F -** 60 **G -** 100 **H -** 120 **A -** 128 **L -** 240 **N -** 256 **P -** 300 **E -** 360 **B -** 480 **Q -** 500 **R -** 512 **S -** 600 **V -** 900 **J -** 960 **W -** 1000 **Y -** 1024 **Z -** 1200 **3 -** 2000 **4 -** 2048 **5 -** 2500 **D -** 4096 **8 -** 4800 **9 -** 5000	**0 -** Non-Std. **X -** None **F -** 60 **G -** 100 **H -** 120 **A -** 128 **L -** 240 **N -** 256 **P -** 300 **E -** 360 **B -** 480 **Q -** 500 **R -** 512 **S -** 600 **V -** 900 **J -** 960 **W -** 1000 **Y -** 1024 **Z -** 1200 **3 -** 2000 **4 -** 2048 **5 -** 2500 **D -** 4096 **8 -** 4800 **9 -** 5000	See Table Below	**000 -** No Modification **003 -** Add 85mm Flange Adapter **004 -** Add Housing Drain (single output only) **005 -** Super Magnetic Shielding **4xx -** Special PPR-Enter Ø in the PPR code(s), select the special option code below **9xx -** Special Cable Length, xx=length in feet **00W -** Connector on 18" cable: Use w/ options "T","U" **017 -** Counter bore mounting holes

* set screw rotor only - ** keyed and single cam screw only

CONNECTOR							
Mounted on Encoder					13" Cable	18" Cable	
10 Pin MS	10 Pin EPIC	10 Pin Mini	7 Pin MS	8 Pin M12	10 Pin MS	10 Pin Mini	10 Pin MS
A - w/o plug (std. phasing) **B -** w/o plug (Dynapar HS35 phasing) **C -** "A" w/ plug **D -** "B" w/ plug	**G -** w/ plug Northstar pinout **P -** w/ plug	**R -** w/ plug	**J -** w/o plug **K -** w/o plug (Servotechnik pinout)	**T -** w/o plug (Turck Pinout) **U -** w/o plug (US Pinout	**Y -** w/o plug on conduit box	**S -** w/ plug	**Q -** w/o plug on remote mount base
Other							
Z - 10 pin EPIC w/ plug **W -** 18" flex cable							

SPECIAL PPR OPTION CODES		
OPTION CODE	LEFT PPR	RIGHT PPR
401	1270	None
402	150	None
403	50	None
404	512	16
405	16	None
406	6000	None
407	2800	None
408	1400	None
409	30	None
410	None	6000
411	1200	None
412	200	None
413	30	30
414	1500	None
415	3000	None
416	3600	None
417	1250	None
418	2400	2400
419	160	160
420	450	None

ERMEC
ERMEC, S.L. BARCELONA
C/ Francesc Teixidó, 22
08918 Badalona SPAIN
Tel. +34 902 450 160
info@ermec.com
www.ermec.com
ERMEC, S.L. - MADRID
C/ Puerto Rico, 4
28222 Majadahonda (Madrid) SPAIN
bilbao@ermec.com
portugal@ermec.com

AV56S THIN-LINE III™ ENCODER - Incremental - Magnetic - Hollow Shaft - Heavy Mill Duty

SPECIFICATIONS

Operating Power:
Volts: 5 - 24 VDC **Current:** 80 mA, no load
Output Format: A Quad B with Marker (A, /A, B, /B, Z, /Z)
Second Isolated Output: Optional
Frequency Range: @5 V, @1 m cable, 250 kHz Max @24V, @300 m cable, #8 output, 45 kHz Max
Maximum Cable Length: 1000'/300 m
PPR: 4 - 50000
Speed: 5400 RPM Max. std., for higher speeds, consult factory
Electronics: Fully Encapsulated, IP67 (see manual for details)
Temperature: -40°C to 100°C (150°C rotor - Intermittent)
Vibration: 18 G
Shock: 1 meter drop test
Chemical: Polyurethane enamel paint protects against salt spray, mild acids, and bases.
Weight: 5 - 6 lb [2.2 - 2.7 kg]
Warranty: 3 Year No-Hassle

AV56S THIN-LINE III™ heavy mill duty modular magnetic encoders are designed for washdown and marine duty and fit a standard 4.5" motor flange. Other THIN-LINE III™ models, ranging from 115mm to 8.5", are available to fit other motor sizes.

First, the magnetic sensors are fully potted, to withstand dirt and liquids. No glass disks, no optics to clog. There are no moving, wearing parts!

The patented Wide-Gap™ rotors put an end to sensor damage, are simpler to install, and stay securely mounted to the shaft.

The universal 5-24V design drives longer cables and is protected against wiring errors and surges.

With a real-world installation history of over 4,500,000 hour MTBF, AV56S encoders will keep your machine running 24/7/365!

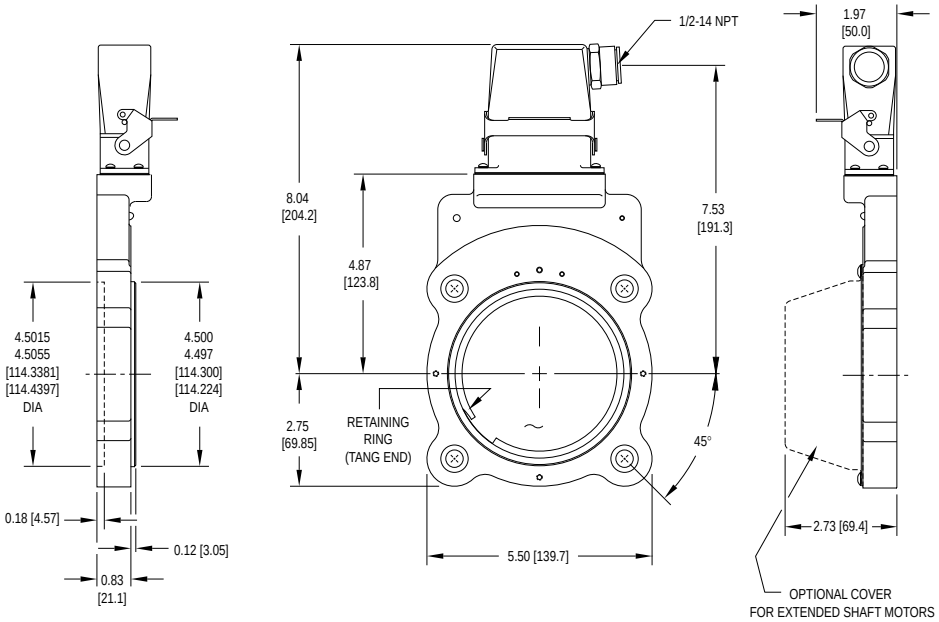

ERMEC
ERMEC, S.L. BARCELONA
C/ Francesc Teixidó, 22
08918 Badalona SPAIN
Tel. +34 902 450 160
info@ermec.com
www.ermec.com
ERMEC, S.L. - MADRID
C/ Puerto Rico, 4
28222 Majadahonda (Madrid) SPAIN
bilbao@ermec.com
portugal@ermec.com

AV56S SELECTION GUIDE

| A | V | 5 | 6 | S | | |

AV67 THIN-LINE III™ ENCODER - Incremental - Magnetic - Hollow Shaft - Heavy Mill Duty

SPECIFICATIONS

Operating Power:
Volts: 5 - 24 VDC **Current:** 100 mA, no load
Output Format: A Quad B with Marker (A, /A, B, /B, Z, /Z)
Frequency Range: @5, @1 m cable, 250 kHz Max @24 V, @300 m cable, #8 output, 45 kHz Max
Max. Instantaneous Current Output: 3000 mA
PPR: 4 - 50000
Speed: 5400 RPM Max. std., for higher speeds, consult factory
Electronics: Fully Encapsulated, IP67
Temperature: -40°C to 100°C (150°C rotor - Intermittent)
Vibration: 18 G
Shock: 1 meter drop test
Chemical: Polyurethane enamel paint protects against salt spray, mild acids, and bases.
Weight: 2-3 lb (0.9 kg to 1.36 kg)
Warranty: 3 Year No-Hassle

AV67 THIN-LINE III™ heavy mill duty modular magnetic encoders fit 6.75” C-Face flanges typically found on Baldor Reliance motors. Other THIN-LINE III™ models, ranging from 115mm to 8.5”, are available to fit other motor sizes.

First, the magnetic sensors are fully potted, to withstand dirt and liquids. No glass disks, no optics to clog. There are no moving, wearing parts!

The patented Wide-Gap™ Cam Screw Rotors™ put an end to sensor damage, are simpler to install, and stay securely mounted to the shaft.

The universal 5-24V design drives longer cables and is protected against wiring errors and surges.

With a real-world installation history of over 4,500,000 hour MTBF, AV67 encoders will keep your machine running 24/7/365!

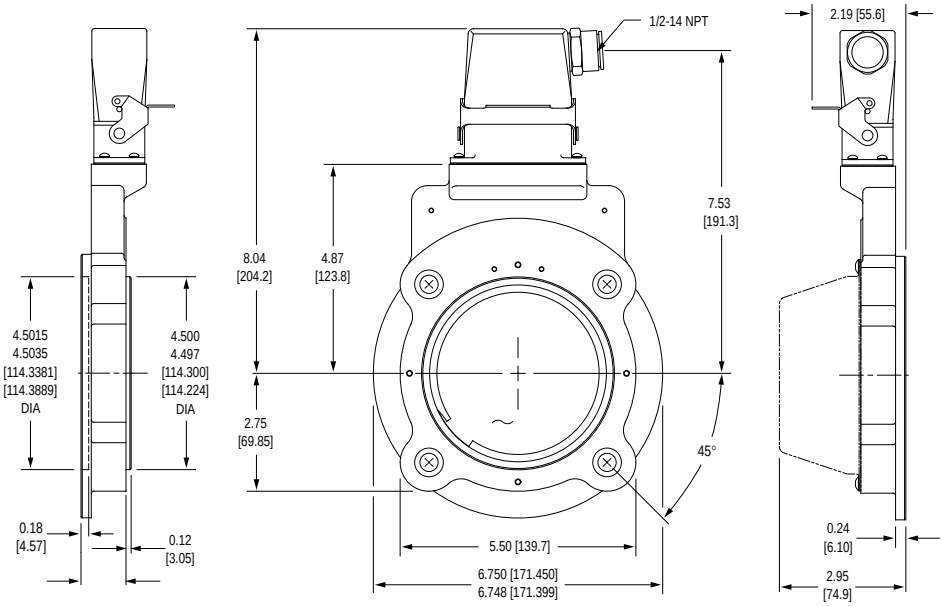

ERMEC
ERMEC, S.L. BARCELONA
C/ Francesc Teixidó, 22
08918 Badalona SPAIN
Tel. +34 902 450 160
info@ermec.com
www.ermec.com
ERMEC, S.L. - MADRID
C/ Puerto Rico, 4
28222 Majadahonda (Madrid) SPAIN
bilbao@ermec.com
portugal@ermec.com

AV67 SELECTION GUIDE

A	V	6	7																

MODEL	HOUSING TYPE	ROTOR CODE		COVER STYLE	LINE DRIVER	LEFT OUTPUT PPR	RIGHT OUTPUT PPR	CONNECTOR	SPECIAL OPTIONS
AV67	**1 -** Single Output	**C0 -** None-std. Shaft Size **XX -** None **US** **CA -** 0.500 **CB -** 0.625 **CC -** 0.875 **CD -** 0.938 **CE -** 1.000 **CF -** 1.125 **C2 -** 1.188 **CG -** 1.250 **CH -** 1.375 **CT -** 1.500 **CJ -** 1.625 **CK -** 1.750 **CL -** 1.875 **CM -** 2.000 **CN - -**2.125 **CQ -** 2.250 **CP -** 2.375 **CR -** 2.500 **TS -** 2.625* **TW -** 2.750* **TU -** 2.875* **TV -** 3.000* **T4 -** 3.125* **T7 -** 3.188* **TZ -** 3.25*	**C0 -** None-std. Shaft Size **XX -** None **Metric** **D2 -** 10mm **DA -** 11mm **D3 -** 12mm **DB -** 14mm **DC -** 15mm **DD -** 16mm **D4 -** 18mm **DE -** 19mm **DF -** 24mm **DG -** 28mm **DH -** 30mm **DT -** 32mm **DJ -** 36mm **DK -** 38mm **DL -** 42mm **DM -** 45mm **DN -** 48mm **DP -** 52mm **DR -** 55mm **DS -** 60mm **MU -** 65mm* **MV -** 70mm* **MW -** 75mm* **MY -** 80mm* **MZ -** 85mm*	**E -** Extended Shaft Cover **F -** Flat Cover **T -** Flat Thru-Hole Cover with Shaft Seal. **D -** Dome Cover **G -** Extended Cover w/ gasket **X -** No Cover	**6 -** 5-24V in/out **8 -** 5-24 V in/out high power (Hx) **9 -** 5-24V in, 5V out	**0 -** Non-std. **F -** 60 **G -** 100 **H -** 120 **A -** 128 **L -** 240 **N -** 256 **P -** 300 **E -** 360 **B -** 480 **Q -** 500 **R -** 512 **S -** 600 **V -** 900 **J -** 960 **W -** 1000 **Y -** 1024 **Z -** 1200 **3 -** 2000 **4 -** 2048 **5 -** 2500 **D -** 4096 **8 -** 4800 **9 -** 5000	**X -** None **0 -** Non-std. **F -** 60 **G -** 100 **H -** 120 **A -** 128 **L -** 240 **N -** 256 **P -** 300 **E -** 360 **B -** 480 **Q -** 500 **R -** 512 **S -** 600 **V -** 900 **J -** 960 **W -** 1000 **Y -** 1024 **Z -** 1200 **3 -** 2000 **4 -** 2048 **5 -** 2500 **D -** 4096 **8 -** 4800 **9 -** 5000	See Table Below	**000 -** No Modification **004 -** Add Housing Drain (single output only) **005 -** Super Magnetic Shielding **4xx -** Special PPR-Enter Ø in the PPR code(s), select the special option code below **9xx -** Special Cable Length, xx=length in feet **00W -** Connector on 18" cable: Use w/ options "T","U"

* Set Screw Rotor only ** Only available with OOW mod code

CONNECTOR OPTIONS								
Mounted on Encoder				12" Cable	18" Cable			Other
10 Pin MS	10 Pin EPIC	10 Pin Mini MS	7 Pin MS	10 Pin MS	10 Pin MS	10 Pin Mini MS	8 Pin M12**	3' Cable
A - w/o plug (std. phasing) **B -** w/o plug (Dynapar HS35 phasing) **C -** "A" w/ plug **D -** "B" w/ plug	**G -** w/ plug Northstar pinout **P -** w/ plug	**R -** w/ plug	**J -** w/o plug	**Y -** w/o plug on conduit box	**Q -** w/o plug on remote mount base	**S -** w/ plug	**T -** w/o plug (Turck Pinout) **U -** w/o plug (US Pinout)	**L -** 3 ft. Cable, Sealed, w/ 90° grommet **W -** Cable **Z -** 10 Pin EPIC w/ plug

SPECIAL PPR OPTION CODES	
OPTION CODE	LEFT PPR
401	1270
402	150
403	50
404	512
405	16
406	6000
407	2800
408	1400
409	30
410	None
411	1200
412	200
413	30
414	1500
415	3000
416	3600
417	1250
418	2400
419	160
420	450

ERMEC
ERMEC, S.L. BARCELONA
C/ Francesc Teixidó, 22
08918 Badalona SPAIN
Tel. +34 902 450 160
info@ermec.com
www.ermec.com
ERMEC, S.L. - MADRID
C/ Puerto Rico, 4
28222 Majadahonda (Madrid) SPAIN
bilbao@ermec.com
portugal@ermec.com

AV85A THIN-LINE III™ ENCODER - Incremental - Magnetic - Hollow Shaft - Heavy Mill Duty

SPECIFICATIONS

Operating Power:
Volts: 5 - 24 VDC **Current:** 100 mA, no load
Output Format: A Quad B with Marker (A, /A, B, /B, Z, /Z)
Second Isolated Output: Optional
Frequency Range: @5 V, @1 m cable, 250 kHz Max @24 V, @300 m cable, #8 output, 45 kHz Max
Maximum Cable Length: 1000'
PPR: 4 - 50000
Speed: 5400 RPM Max. std., for higher speeds, consult factory
Electronics: Fully Encapsulated, IP67 (see manual for details)
Temperature: -40°C to 100°C (150°C rotor - Intermittent)
Vibration: 18 G
Shock: 1 meter drop test
Chemical: Polyurethane enamel paint protects against salt spray, mild acids, and bases.
Weight: 2 - 3 lb [0.9 - 1.36 kg]
Warranty: 3 Year No-Hassle

AV85A THIN-LINE III™ heavy mill duty modular magnetic encoders fit standard 8.5" C-Face motors and 8.5" flanges commonly used for NEMA brake mounting. Other THIN-LINE III™ models, ranging from 115mm to 6.75", are available to fit other motor sizes, and AV125 is available for 12.5" NEMA brake applications.

THIN-LINE III™ encoders feature simple installation, durable construction, and clear diagnostics to eliminate encoder-related downtime: First, the magnetic sensors are fully potted to withstand dirt and liquids. No glass disks, no optics to clog. There are no moving, wearing parts! The patented Wide-Gap™ Cam Screw Rotors™ put an end to sensor damage, are simpler to install, and stay securely mounted to the shaft.

The universal 5-24V design drives longer cables and is protected against wiring errors and surges. When you power up an AV85, you know you installed it right: the green light tells you the digital self-tuning has set your AV85 optimally. If at any time the AV85 cannot produce ideal signals, the LED changes to red and the remote alarm contact activates. However, the encoder keeps working to give you time to schedule service. Any time there are wiring errors, the LED changes to orange. AV85 is the ideal solution to keep your motor and drive system running 24/7/365!

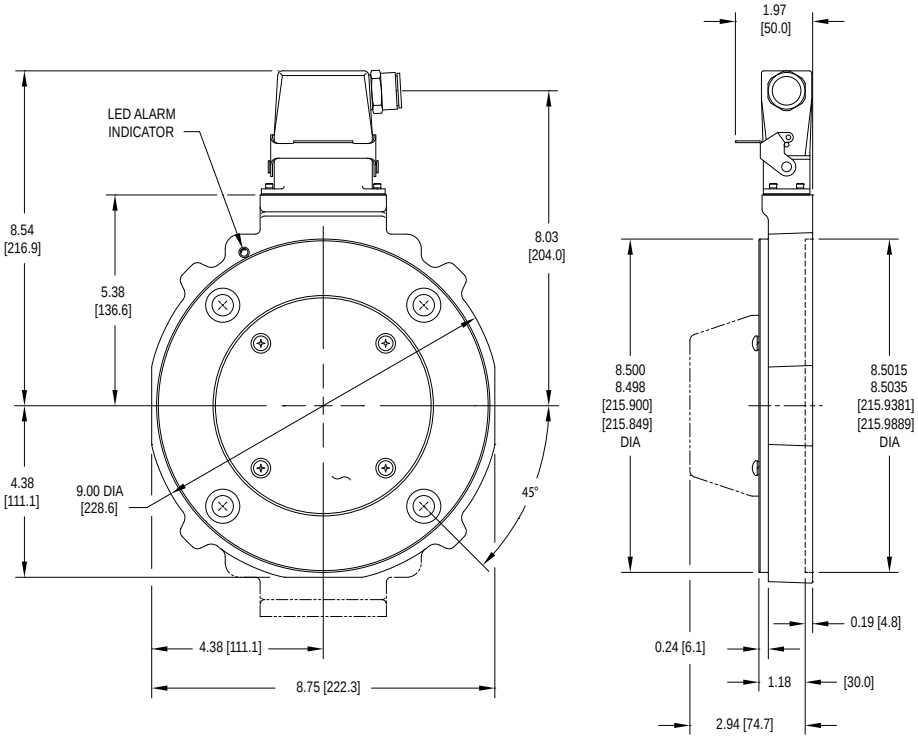

ERMEC
ERMEC, S.L. BARCELONA
C/ Francesc Teixidó, 22
08918 Badalona SPAIN
Tel. +34 902 450 160
info@ermec.com
www.ermec.com
ERMEC, S.L. - MADRID
C/ Puerto Rico, 4
28222 Majadahonda (Madrid) SPAIN
bilbao@ermec.com
portugal@ermec.com

AV85A SELECTION GUIDE

A	V	8	5	A																			

MODEL	HOUSING TYPE	ROTOR CODE		COVER STYLE	LINE DRIVER	LEFT OUTPUT PPR	RIGHT OUTPUT PPR	CONNECTOR	SPECIAL OPTIONS
AV85A	**1 -** Single Output **2 -** Dual Output	**C0 or T0 -** None-std. Shaft Size **XX -** None **US** **CA -** 0.500 **CB -** 0.625 **CC -** 0.875 **CD -** 0.938 **CE -** 1.000 **C3 -** 1.112 **CF -** 1.125 **C2 -** 1.188 **CG -** 1.250 **CH -** 1.375 **CT -** 1.500 **CJ -** 1.625 **CK -** 1.750 **CL -** 1.875 **CM -** 2.000 **CN - -**2.125 **CQ -** 2.250 **CP -** 2.375 **CR -** 2.500 **TW -** 2.750* **TS -** 2.625* **TU -** 2.875* **TV -** 3.000* **T4 -** 3.125* **T7 -** 3.188* **TZ -** 3.250*	**C0 or M0 -** None-std. Shaft Size **XX -** None **Metric** **D2 -** 10mm **DA -** 11mm **D3 -** 12mm **DB -** 14mm **DC -** 15mm **DD -** 16mm **D6 -** 17mm **D4 -** 18mm **DE -** 19mm **D6 -** 20mm **DF -** 24mm **D5 -** 25mm **DG -** 28mm **DH -** 30mm **DT -** 32mm **DJ -** 36mm **DK -** 38mm **DL -** 42mm **DM -** 45mm **DN -** 48mm **DP -** 52mm **DR -** 55mm **DS -** 60mm **MU -** 65mm* **MV -** 70mm* **MW -** 75mm* **MY -** 80mm* **MZ -** 85mm*	**E -** Extended Shaft Cover **F -** Flat Cover **T -** Flat Thru-Hole Cover with Shaft Seal. **G -** Extended Cover w/ Gasket	**6 -** 5-24V in/out **8 -** 5-24 V in/out high power **9 -** 5-24V in, 5V out	**0 -** Non-std. **F -** 60 **G -** 100 **H -** 120 **A -** 128 **L -** 240 **N -** 256 **P -** 300 **E -** 360 **B -** 480 **Q -** 500 **R -** 512 **S -** 600 **V -** 900 **J -** 960 **W -** 1000 **Y -** 1024 **Z -** 1200 **3 -** 2000 **4 -** 2048 **5 -** 2500 **D -** 4096 **8 -** 4800 **9 -** 5000	**X -** None **0 -** Non-std. **F -** 60 **G -** 100 **H -** 120 **A -** 128 **L -** 240 **N -** 256 **P -** 300 **E -** 360 **B -** 480 **Q -** 500 **R -** 512 **S -** 600 **V -** 900 **J -** 960 **W -** 1000 **Y -** 1024 **Z -** 1200 **3 -** 2000 **4 -** 2048 **5 -** 2500 **D -** 4096 **8 -** 4800 **9 -** 5000	See Table Below	**000 -** No Modification **004 -** Add Housing Drain (single output only) **005 -** Super Magnetic Shielding **4xx -** Special PPR **PPR -** Enter Ø in the PPR code(s), select the special option code below **9xx -** Special Cable Length, xx=length in feet **00W -** Connector on 18" cable: Use w/ options "T","U" **017 -** Counter bore Mounting Holes

* Set Screw Rotor only

CONNECTOR OPTIONS								
Mounted on Encoder				12" Cable	18" Cable			Other
10 Pin MS	**10 Pin EPIC**	**10 Pin Mini MS**	**7 Pin MS**	**10 Pin MS**	**10 Pin MS**	**10 Pin Mini MS**	**8 Pin M12**	**3' Cable**
A - w/o plug (std. phasing) **B -** w/o plug (Dynapar HS35 phasing) **C -** "A" w/ plug **D -** "B" w/ plug	**G -** w/ plug Northstar pinout **P -** w/ plug	**R -** w/ plug	**J -** w/o plug	**Y -** w/o plug on conduit box	**Q -** w/o plug on remote mount base	**S -** w/ plug	**T -** w/o plug (Turck Pinout) **U -** w/o plug (US Pinout)	**W -** Cable **Z -** 10 Pin EPIC w/ plug

SPECIAL PPR OPTION CODES		
OPTION CODE	LEFT PPR	RIGHT PPR
401	1270	None
402	150	None
403	50	None
404	512	16
405	16	None
406	6000	None
407	2800	None
408	1400	None
409	30	None
410	None	6000
411	1200	None
412	200	None
413	30	30
414	1500	None
415	3000	None
416	3600	None
417	1250	None
418	2400	2400
419	160	160
420	450	None

ERMEC
ERMEC, S.L. BARCELONA
C/ Francesc Teixidó, 22
08918 Badalona SPAIN
Tel. +34 902 450 160
info@ermec.com
www.ermec.com
ERMEC, S.L. - MADRID
C/ Puerto Rico, 4
28222 Majadahonda (Madrid) SPAIN
bilbao@ermec.com
portugal@ermec.com

AV115 THIN-LINE III™ ENCODER - Incremental - Magnetic - Hollow Shaft - Heavy Mill Duty

SPECIFICATIONS

Operating Power:
Volts: 5 - 24 VDC **Current:** 100 mA, no load
Output Format: A Quad B with Marker (A, /A, B, /B, Z, /Z)
Second Isolated Output: Optional
Frequency Range: @5 V, @1 m cable, 250 kHz Max @24 V, @300 m cable, #8 output, 45 kHz Max
Max. Instantaneous Current Output: 3000 mA
PPR: 4 - 50000
Speed: 5000 RPM Max. std., for higher speeds, consult factory
Electronics: Fully Encapsulated, IP67*
Temperature: -40°C to 100°C (150°C rotor - Intermittent)
Vibration: 18 G
Shock: 1 meter drop test
Chemical: Polyurethane enamel paint protects against salt spray, mild acids, and bases
Weight: 0.9 kg to 1.36 kg.
Warranty: 3 Year No-Hassle
* May vary depending on options selected

AV115 THIN-LINE III™ heavy mill duty modular magnetic encoders fit standard 115mm flange motors. Adapters are available to fit European B10-flange (85mm/100mm BC) motors. Other THIN-LINE III™ models, ranging from 4.5” to 8.5”, are available to fit other motor sizes as needed. For Euro B10-flange, AV45 is also available.

First, the magnetic sensors are fully potted to withstand dirt and liquids. No glass disks, no optics to clog. There are no moving, wearing parts! The patented Wide-Gap™ Cam Screw Rotors™ put an end to sensor damage, are simpler to install, and stay securely mounted to the shaft. The universal 5-24V design drives longer cables and is protected against wiring errors and surges.

When you power up an AV115, you know you installed it right: the green light tells you the digital self-tuning has set your AV115 optimally. If at any time, the AV115 cannot produce ideal signals, the light changes to red and the remote alarm contact activates. However, the encoder keeps working to give you time to schedule service. Any time there are wiring errors, the LED changes to orange.

With a real-world installation history of over 4,500,000 hour MTBF, AV115 encoders will keep your machine running 24/7/365!

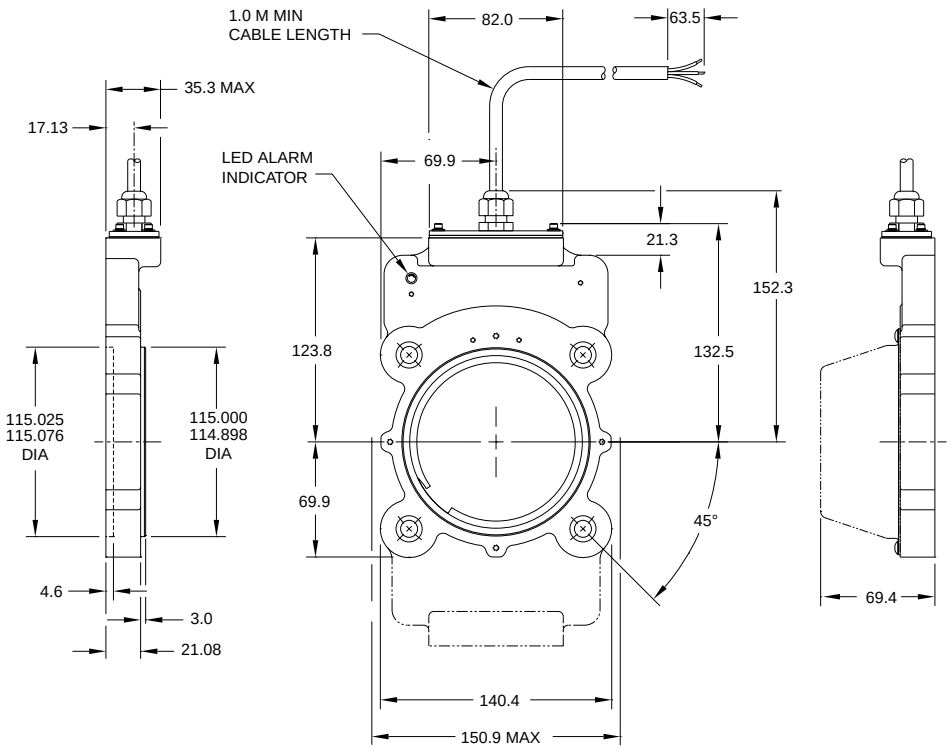

ERMEC
ERMEC, S.L. BARCELONA
C/ Francesc Teixidó, 22
08918 Badalona SPAIN
Tel. +34 902 450 160
info@ermec.com
www.ermec.com
ERMEC, S.L. - MADRID
C/ Puerto Rico, 4
28222 Majadahonda (Madrid) SPAIN
bilbao@ermec.com
portugal@ermec.com

AV115 SELECTION GUIDE

A	V	1	1	5										

MODEL	HOUSING TYPE	SHAFT SIZE (METRIC)	COVER STYLE	LINE DRIVER	LEFT OUTPUT PPR	RIGHT OUTPUT PPR	CONNECTOR	SPECIAL OPTIONS
AV115	**1 -** Single Output **2 -** Dual Output	**D0/M0 -** None-std. Shaft Size **XX -** None Thru Shaft Rotor: **D2** - 10mm **DA** - 11mm **D3** - 12mm **DB** - 14mm **DC** - 15mm **DD** - 16mm **D6** - 17mm **D4** - 18mm **DE** - 19mm **D7** - 20mm **DF** - 24mm **D5** - 25mm **DG** - 28mm **DH** - 30mm **DT** - 32mm **DJ** - 36mm **DK** - 38mm **DL** - 42mm **DM** - 45mm **DN** - 48mm **DQ** - 50mm **DP** - 52mm **DR** - 55mm **DS** - 60mm **MU** - 65mm* **MV** - 70mm* **MW** - 75mm* **MY** - 80mm* **MZ** - 85mm*	**E -** Extended Shaft Cover **F -** Flat Cover **T -** Flat Thru-Hole Cover with Shaft Seal **D -** Dome Cover **G -** Extended cover w/gasket	**6 -** 5-24V in/out Hi-Power (Hx) **8 -** 5-24 V in Hi-Power (Hx) **9 -** 5-24V in, 5V out Hi-Power (Hx)	**0 -** Non-std. **F -** 60 **G -** 100 **H -** 120 **A -** 128 **L -** 240 **N -** 256 **P -** 300 **E -** 360 **B -** 480 **Q -** 500 **R -** 512 **S -** 600 **V -** 900 **J -** 960 **W -** 1000 **Y -** 1024 **Z -** 1200 **3 -** 2000 **4 -** 2048 **5 -** 2500 **D -** 4096 **8 -** 4800 **9 -** 5000	**X -** None **0 -** Non-std. **F -** 60 **G -** 100 **H -** 120 **A -** 128 **L -** 240 **N -** 256 **P -** 300 **E -** 360 **B -** 480 **Q -** 500 **R -** 512 **S -** 600 **V -** 900 **J -** 960 **W -** 1000 **Y -** 1024 **Z -** 1200 **3 -** 2000 **4 -** 2048 **5 -** 2500 **D -** 4096 **8 -** 4800 **9 -** 5000	See Table Below	**000 -** No Modification **004 -** Add Housing Drain (single output only) **005 -** Super Magnetic Shielding **4xx -** Special PPR **PPR -** Enter Ø in the PPR code(s), select the special option code below **9xx -** Special Cable Length, xx=length in feet **00W -** Connector on 18" cable: Use w/ options "T","U"

* Set Screw Rotor only

CONNECTOR OPTIONS							
Mounted on Encoder				Mounted on 18" cable			Other
10 Pin MS	10 Pin EPIC	10 Pin mini MS	7 Pin MS	8 Pin M12	10 Pin EPIC	10 Pin mini MS	
A - w/o plug (std. phasing) **B -** w/o plug (Dynapar HS35 phasing) **C -** "A" w/ plug **D -** "B" w/ plug	**G -** w/ plug Northstar pinout **P -** w/ plug	**R -** w/ plug	**J -** w/o plug **K -** w/o plug (servotechnik pin out)	**T -** w/o plug (Turck Pinout) **U -** w/o plug (US Pinout)	**Q -** w/o plug on remote mount base	**S -** w/ plug	**W -** 3 Ft. Cable, Sealed **Y -** w/o plug on conduit box **Z -** 10 pin EPIC w/ plug

SPECIAL PPR OPTION CODES		
OPTION CODE	LEFT PPR	RIGHT PPR
401	1270	None
402	150	None
403	50	None
404	512	16
405	16	None
406	6000	None
407	2800	None
408	1400	None
409	30	None
410	None	6000
411	1200	None
412	200	None
413	30	30
414	1500	None
415	3000	None
416	3600	None
417	1250	None
418	2400	2400
419	160	160
420	450	None

ERMEC
ERMEC, S.L. BARCELONA
C/ Francesc Teixidó, 22
08918 Badalona SPAIN
Tel. +34 902 450 160
info@ermec.com
www.ermec.com
ERMEC, S.L. - MADRID
C/ Puerto Rico, 4
28222 Majadahonda (Madrid) SPAIN
bilbao@ermec.com
portugal@ermec.com

AV125 SMARTACH™ III ENCODER - Incremental - Magnetic - Hollow Shaft - Heavy Mill Duty

SPECIFICATIONS

Operating Power:
Each Sensor: 5-24 V **Current:** 100 mA nom, no load
Output Format: A Quad B with marker (A, /A, B, /B, Z, /Z)
Frequency Range: @5 V, @1 m cable, 250 kHz Max @24 V, @300 m cable, #8 output, 45 kHz Max
Maximum Cable Length: 1000'
PPR: 4 - 50000
Speed: 5000 RPM Max
Axial Rotor Positioning: Up to +/-0.100" movement/misalignment
Sensor-Rotor Gap: 0.045", +0.015/-0.040" [1.14 mm+0.38/-1.0]
Temperature: -40°C to 100°C (rotor -40°C to 150°C - Intermittent)
Electronics: Fully Encapsulated, IP67
Vibration: 18G
Shock: 1 meter drop test
Weight: 15-17 lb [6.8-8 kg]
Warranty: 3 Year No-Hassle

AV125 SMARTach™ III heavy mill duty modular magnetic encoders fit 12.5" motor and NEMA brake flanges. Other models, from 115mm to 8.5", are available to fit other motor sizes.

AV125 is ideal for large motor and brake applications where a large diameter through-shaft is needed. It permits shafts up to 7 7/8" [200mm] to pass through the encoder, facilitating motor-encoder-brake sandwich construction, as well as hollow shafts for water or air cooling systems to pass through the encoder. Because AV125 is super-reliable and features removable sensors, you can install it in hard-to-access configurations and locations without risk of downtime.

Quite simply, the AV125 is designed to eliminate encoder failures: All AV125 electronics are fully encapsulated. There are no moving wearing parts. AV125 sensors locate over 4X farther from the rotor than the competition; no more sensor/rotor grinding! Miswiring an encoder is common – and it shouldn't cost you time or money. The AV125 has full output short circuit and reverse voltage protection, plus surge protection.

Why risk tiny fragile optical encoders perched precariously behind your large motor or brake. Specify a heavy duty AV125 encoder!

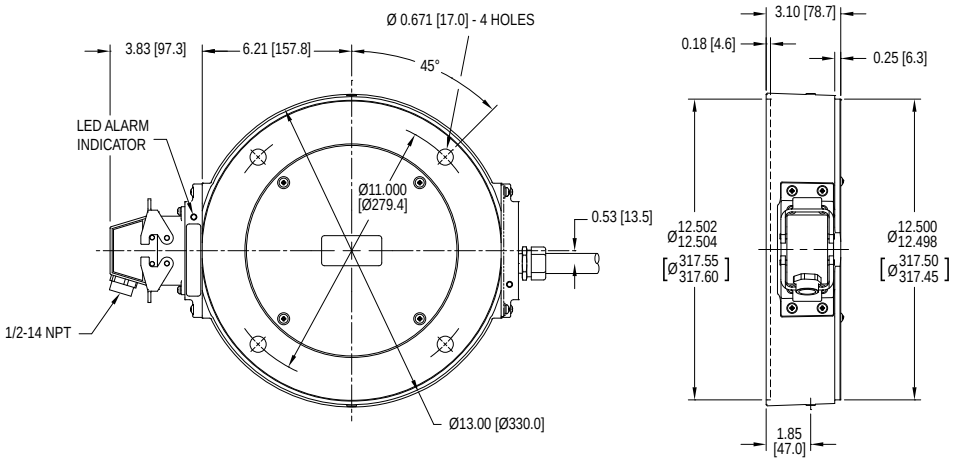

ERMEC
ERMEC, S.L. BARCELONA
C/ Francesc Teixidó, 22
08918 Badalona SPAIN
Tel. +34 902 450 160
info@ermec.com
www.ermec.com
ERMEC, S.L. - MADRID
C/ Puerto Rico, 4
28222 Majadahonda (Madrid) SPAIN
bilbao@ermec.com
portugal@ermec.com

AV125 SELECTION GUIDE

| A | V | 1 | 2 | 5 | | |

AV850 SMARTACH™ III ENCODER - Incremental - Magnetic - Hollow Shaft - Heavy Mill Duty

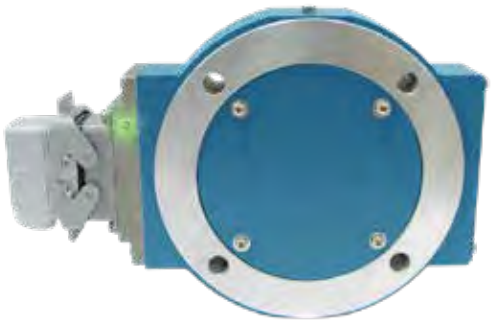

SPECIFICATIONS

Operating Power:
Each Sensor: 5-24 V **Current:** 100 mA
Output Format: A Quad B with marker (A, /A, B, /B, Z, /Z)
Frequency Range: @5 V, @1 m cable, 250 kHz Max @24 V, @300 m cable, #8 output, 45 kHz Max
Maximum Cable Length: 1000'
PPR: 4 - 50000
Speed: 6000 RPM Max
Rotor Positioning: Up to +/-0.100" movement/misalignment
Sensor-Rotor Gap: 0.045", +0.015/-0.040" [1.14 mm+0.38/-1.0]
Temperature: -40°C to 100°C (rotor -40°C to 150°C - Intermittent)
Electronics: Fully Encapsulated, IP67
Vibration: 18 G
Shock: 1 meter drop test
Weight: 9 lb [4 kg]; 11 lb [5 kg] dual
Warranty: 1 Year No-Hassle

SMARTach™ III Magnetic, Modular Encoder, 8.5" C-Face Mount

AV850 SMARTach™ III heavy mill duty modular magnetic encoders fit standard 8.5" FC-Face motors. Other models, from 115mm to 12.5", are available to fit other motor sizes, and hazardous duty models: XR850 are also available.

Quite simply, the AV850 is designed to eliminate encoder failures.

All AV850 electronics are fully encapsulated. There are no moving wearing parts. AV850 sensors locate over 4X farther from the rotor than the competition; no more sensor/rotor grinding!

Miswiring an encoder is common– and it shouldn't cost you time or money. The AV850 has full output short circuit and reverse voltage protection, plus surge protection. AV850 SMARTach™ III sensors digitally self-tune the outputs to eliminate drive trips caused by poor encoder signals. The universal 5-24V design drives longer cables and is protected against wiring errors and surges.

Adaptive Electronics: At power-up you know you installed it right! The green LED tells you your AV5 Sensor is aligned with the rotor and reading signal. If at any time, the AV5 cannot produce consistent signals, the LED changes to red and the optional remote alarm contact activates. However, the encoder keeps working to give you time to schedule service. Even wiring errors and short circuits that cause an over-temp situation will be detected and indicated by changing the LED to orange.

If you think you need to replace your drives to end your encoder failures, try a better encoder instead. Specify AV850!

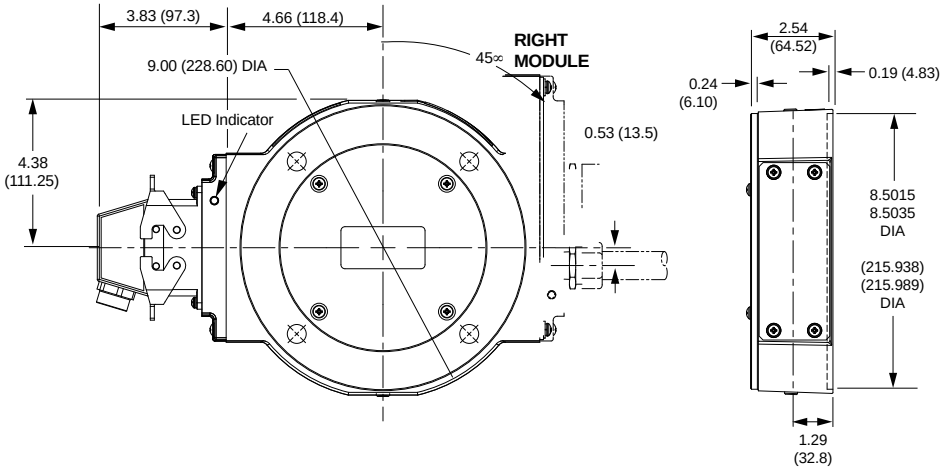

ERMEC, S.L. BARCELONA
C/ Francesc Teixidó, 22
08918 Badalona SPAIN
Tel. +34 902 450 160
info@ermec.com
www.ermec.com
ERMEC, S.L. - MADRID
C/ Puerto Rico, 4
28222 Majadahonda (Madrid) SPAIN
bilbao@ermec.com
portugal@ermec.com

AV850 SELECTION GUIDE

A	V	8	5	0										

MODEL	ROTOR STYLE	SHAFT SIZE	LEFT MODULE		RIGHT MODULE		CONNECTOR OPTIONS	SPECIAL OPTIONS
			LINE DRIVER	PPR	LINE DRIVER	PPR		
AV850	See Table Below	See Table Below	**X -** None **6 -** 5-24V in/out (7272) **8 -** 5-24V in/out Hi-Power (Hx) **9 -** 5-24V in, 5V out (7272)	**X -** none **F -** 60 **C -** 64 **G -** 100 **H -** 120 **A -** 128 **L -** 240 **N -** 256 **P -** 300 **E -** 360 **B -** 480 **Q -** 500 **R -** 512 **S -** 600 **V -** 900 **J -** 960 **W -** 1000 **Y -** 1024 **Z -** 1200 **3 -** 2000 **6 -** 1800 **4 -** 2048 **5 -** 2500 **D -** 4096 **8 -** 4800 **9 -** 5000 **0 -** special	**X -** None **6 -** 5-24V in/out (7272) **8 -** 5-24V in/out Hi-Power (Hx) **9 -** 5-24V in, 5V out (7272)	**X -** None **F -** 60 **C -** 64 **G -** 100 **H -** 120 **A -** 128 **L -** 240 **N -** 256 **P -** 300 **E -** 360 **B -** 480 **Q -** 500 **R -** 512 **S -** 600 **V -** 900 **J -** 960 **W -** 1000 **Y -** 1024 **Z -** 1200 **3 -** 2000 **6 -** 1800 **4 -** 2048 **5 -** 2500 **D -** 4096 **8 -** 4800 **9 -** 5000 **0 -** special	See Table Below	**000 -** None **003 -** Include analog signal converter (K661) **004 -** Super magnetic shielding **4xx -** Special PPR (See Table Below) **704 -** Large Motor Stator Adapter+ super mag. shielding **007 -** Marine sealed housing, single output only

ROTOR STYLE	SHAFT SIZE							
T - Thru Shaft (Inch) **C -** Thru Shaft, Cam Screw (Inch)	**A -** 0.750 **B -** 0.625 **C -** 0.875 **E -** 1.000	**F -** 1.125 **H -** 1.375 **8 -** 1.500 **J -** 1.625	**K -** 1.750 **L -** 1.875 **M -** 2.000 **N -** 2.125	**P -** 2.375 **Q -** 2.250 **R -** 2.500 **T -** 2.625	**S -** 2.771 **2 -** 2.875 **U -** 3.000 **W -** 3.250	**Y -** 3.375 **Z -** 3.421 **V -** 3.438 **3 -** 3.500	**D -** 3.625• **G -** 3.750• **4 -** 3.875• **1 -** 4.000•	**5 -** 4.125• **6 -** 4.500• **9 -** 4.501• • Style "T" only.
M - Thru Shaft (mm) **D -** Thru Shaft (mm) Cam Screw	**F -** 30mm **J -** 42mm **P -** 60mm	**Y -** 80mm (f6) **Z -** 80mm (h7) **4 -** 95mm (m6)	**D -** 93mm (g6) **E -** 19mm (h7) **S -** 70mm (m6)	**T -** 70mm (h7) **2 -** 80mm (g6) **3 -** 90mm (m6)	**5 -** 100mm (m6) **8 -** 110mm (g6)			
U - Universal of Shaft Adapter **G -** Universal with Grounding Kit **Q -** Adapter for Stacked Encoders	**F -** 1.125 GE CD180-320 **N -** 2.125 GE CD360 **P -** 2.375 GE CD400 **2 -** 2.875 GE CD500 **R -** GE CD507, 509	**9 -** GE CD6000, 6100, 6200, 6700, 6800, & 6900 **V -** GE CD4300, 4400, 5400,6400 & 6500 **W -** GE CD4500, 7500, 7600	**Y -** GE CD4600, 4700, 8500, & 8600 **Z -** GE CD680 **4 -** ABB 95mm	**U -** Universal (Includes 1 Rotor & Shaft adapters for all motors except Q, R, Z, 4) **Q -** GE CD444/505E				
X - No Rotor	**X -** None							

CONNECTOR OPTIONS							
Mounted on Encoder Body				3' Cable			5' Flexible Conduit
P - Large, with plug **G -** Large, (Northstar™ Pinout) with Plug **1 -** Small, (M3/M4 Pinout)	**E -** (M737 Pinout) without Plug **F -** "E" with Plug **H -** Pinout) without Plug **J -** "H" with Plug	**A -** Without plug **B -** With plug **C -** With plug & flex conduit adapter **L -** With right angle plug	**K -** Condulet with leads **R -** Mini MS TwistLock with plug **3 -** 6 Pin MS connector (M940 Pinout) **5 -** 10 Pin MS w/o plug- Dynapar pin out **7 -** 7 Pin MS w/o plug	**Z -** Large, with plug **Q -** Large, with plug on remote base, 18" cable	**S -** Mini MS without Plug	**W -** Leads only	**N -** Leads only **T -** Terminal box

ERMEC
ERMEC, S.L. BARCELONA
C/ Francesc Teixidó, 22
08918 Badalona SPAIN
Tel. +34 902 450 160
info@ermec.com
www.ermec.com
ERMEC, S.L. - MADRID
C/ Puerto Rico, 4
28222 Majadahonda (Madrid) SPAIN
bilbao@ermec.com
portugal@ermec.com

AV685 SMARTACH™ III ENCODER - Incremental - Magnetic - Hollow Shaft - Severe Mill Duty

SPECIFICATIONS

Operating Power:
Volts: 5 - 24 VDC* **Current:** 100 mA,nominal, no load
Output Format: A Quad B with marker (A, /A, B, /B, Z, /Z)
Second Isolated Output: Optional
Frequency Range: @5 V, @1 m cable, 250 kHz Max @24 V, @300 m cable, #8 output, 45 kHz Max
Maximum Cable Length: 1000'
PPR: 4 - 50000***
Speed: 5400 RPM Max****
Electronics: Fully Encapsulated, IP67**
Temperature: -40°C to 120°C (150°C rotor - Intermittent)^
Environmental: Electronics: Fully Encapsulated; IP66; Nema 4, 13 Rating
Chemical: Polyurethane enamel paint protects against salt spray, mild acids, and bases
Weight: 15-17 lb [6-8 kg]
Warranty: 1 Year No-Hassle

SMARTach™ III Magnetic Encoder, 1-1/8" Hollow Shaft Mount

AV685 hollow shaft encoders survive the worst conditions: dust, dirt, liquid sprays, and temperature extremes from -40°C* to +120°C*!

The durable hollow shaft design tolerates huge axial movements, and withstands more shaft runout than any other encoder available.

The dual, replaceable sensors have fully potted electronics and are interchangeable between AV485, AV685, and AV850. And, they feature high-power outputs that drive long cable lengths easily. These AV5 SMARTach™ III sensors have the best protection of any encoder—from surges, wiring outputs to power, ground, between phases, or even short circuits!

The universal 5-24V design drives longer cables and is protected against wiring errors and surges.

Adaptive Electronics: at power-up you know you installed it right! The green LED tells you your AV5 Sensor is aligned with the rotor and reading signal. If at any time, the AV5 cannot produce consistent signals, the LED changes to red and the optional remote alarm contact activates. However, the encoder keeps working to give you time to schedule service. Even wiring errors and short circuits that cause an over-temp situation will be detected and indicated by changing the LED to orange.

So if you want the most durable and reliable encoder in your mill, select AV685.

* Electrical specifications for SMARTach™ III model (serial #30,000 or higher), consult Nidec model specifications.

** Certain connector options may reduce IP rating.

***(PPR) Standard maximum PPR is 5000. Consult Factory with your application for PPRs up to 50,000.

**** (Speed) Maximum RPM may be limited for PPR > 2,500. Consult Factory with your application.

^ -20°C to 80°C Standard, requires high-temperature model and instrument air feed for 120°C rating

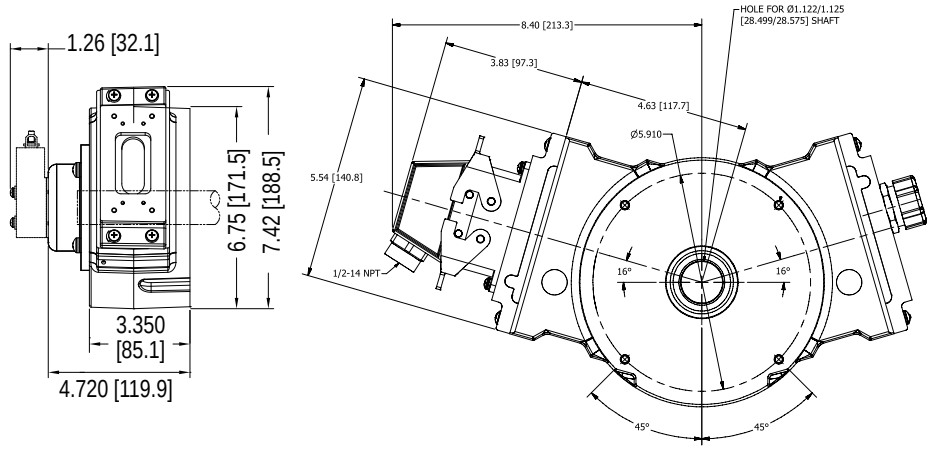

ERMEC
ERMEC, S.L. BARCELONA
C/ Francesc Teixidó, 22
08918 Badalona SPAIN
Tel. +34 902 450 160
info@ermec.com
www.ermec.com
ERMEC, S.L. - MADRID
C/ Puerto Rico, 4
28222 Majadahonda (Madrid) SPAIN
bilbao@ermec.com
portugal@ermec.com

AV685 SELECTION GUIDE

| A | V | 6 | 8 | 5 | | |

AV4 INCREMENTAL ENCODER - Incremental - Magnetic - Shafted - Light Mill Duty

SPECIFICATIONS

Operating Power:
Volts: 5 - 30 VDC **Current:** 140 mA @ 5 V, 70 mA @ 10 VDC, 40 mA @ 24 VDC, no load
Output Format: A Quad B with marker (A, /A, B, /B, Z, /Z) standard
Frequency Range: 0 to 1 mHz
PPR: 1 - 16,384 Standard (for other PPR needs consult factory)
Speed: 6000 RPM Max., (for higher speeds, consult factory)
Axial Load: 9 lb [40 N], Radial 25 lb [110 N]
Temperature: -40°C to +85°C
Environment: up to IP69K (when provided with shaft seals, SST housing)
Vibration: 10 G (10 Hz – 1000 Hz, EN 60068-2-6)
Shock: 100 G (half sine 6 ms, EN 60068-2-27)
Weight: 0.44-1.76 lb [200-800 g]
Warranty: 2 Year No-Hassle

AV4 magnetic encoders are setting THE industry standard for incremental quadrature rotary encoders. This versatile lineup fits the same mounting patterns on all motors and machines as competitor optical units, but that's where the similarities end. We've incorporated magnetic sensing technology to this affordable set of encoders which makes them more resistant to dust, dirt, oil and other liquids that make ordinary optical encoders fail.

Our Wide-Gap™ technology provides for 10-20X larger air gap between sensor and rotor than ordinary optical encoder designs. Our high-accuracy magnetic sensors provide high quality quadrature signals for precise velocity and position control with the durability of magnetic sensing technology.

Our magnetic AV4 model encoders are setting a new standard for quality, durability, and performance. Select an AV4 Avtron Encoder today!

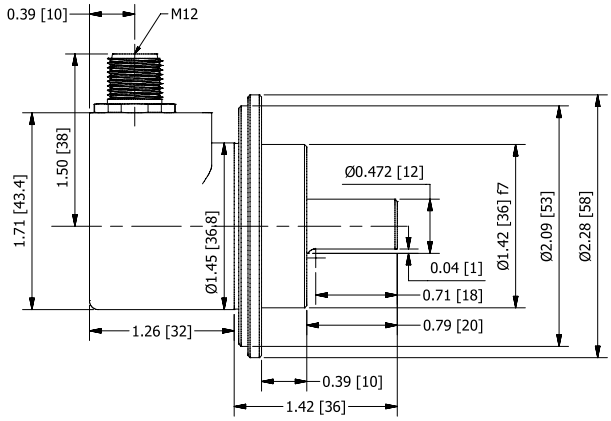

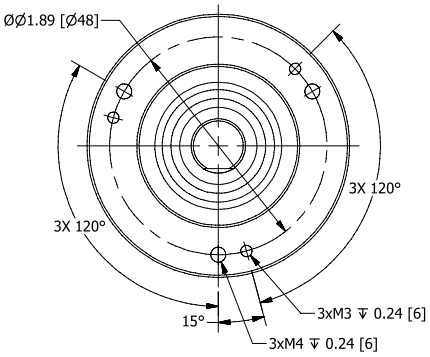

ERMEC
ERMEC, S.L. BARCELONA
C/ Francesc Teixidó, 22
08918 Badalona SPAIN
Tel. +34 902 450 160
info@ermec.com
www.ermec.com
ERMEC, S.L. - MADRID
C/ Puerto Rico, 4
28222 Majadahonda (Madrid) SPAIN
bilbao@ermec.com
portugal@ermec.com

AV4 SELECTION GUIDE

A	V	4											

MODEL	PPR	LINE DRIVER	SHAFT SIZE	CONNECTOR	CONNECTOR EXIT	FLANGE STYLE	HOUSING SIZE	SEALS	CHANNELS	MOD CODE
AV4	**BA -** 30 **AA -** 32 **AK -** 80 **BC -** 100 **AH -** 120 **AC -** 128 **AM -** 200 **AL -** 240 **AN -** 256 **AE -** 360 **AG -** 400 **AB -** 480 **AQ -** 500 **AR -** 512 **AS -** 600 **AP -** 720 **AJ -** 960 **AW -** 1000 **AY -** 1024 **AZ -** 1200 **AV -** 1440 **AU -** 1800 **A3 -** 2000 **A4 -** 2048 **AT -** 3072 **A6 -** 3600 **AD -** 4096 **A8 -** 4800 **A9 -** 5000 **CA -** 12700 **CB -** 10000	**1 -** 5-30V In/Out **4 -** 5-30V In & 5V Out	**A -** 0.25" OD x 0.625" long with flat **B -** 0.375" OD x 0.625" long with flat **C -** 10mm OD x 20mm long with flat **R -** 10mm OD x 20mm long w/o flat **T -** 6mm OD x 10mm long w/o flat	See Table Below	**R -** Radial (side) **A -** Axial (end)	See Table Below	**3 -** 36mm **4 -** 42mm SST **5 -** 58mm	**A -** IP65 seals, alum housing **G -** IP67 seals, alum housing **J -** IP67 seals, SST housing **K -** IP69K seals, SST housing **X -** IP54 no seals** ****NOT RECOMMENDED**	**A -** All channels (A, /A, B, /B, Z, /Z) **B -** A, /A, B, /Z, No marker **E -** A, B, Z, No compliments	**000 -** None **901 -** 1' [0.3m] cable **902 -** 2' [0.6m] cable **903 -** 3' [0.9m] cable **905 -** 5' [1.5m] cable **910 -** 10' [3m] cable **915 -** 15' [4.5m] cable **920 -** 20' [6m] cable **925 -** 25' [7.5m] cable **930 -** 30' [9m] cable

* "4" Housing only available with "K" seals

CONNECTOR									
A - 10 pin MS w/o Plug, Avtron/BEI Pinout **B -** 10 pin MS w/o Plug, Dynapar HS35 pinout (Rev Phasing)	**C -** 10 pin MS with Plug, Avtron/BEI Pinout **D -** 10 pin MS with Plug, Dynapar HS35 pinout (Rev Phasing)	**E -** 6 pin MS w/o Plug, BEI/Avtron HS35 pinout **F -** 6 pin MS w/o Plug, Dynapar HS35 Pinout (Rev Phasing)	**G -** 6 pin MS with Plug, BEI/ Avtron HS35 pinout **H -** 6 pin MS with Plug, Dynapar HS35 Pinout (Rev Phasing)	**J -** 7 pin MS w/o Plug, Avtron/BEI HS35 Pinout **K -** 7 pin MS w/o Plug, Dynapar HS35 Pinout (Rev Phasing)	**M -** 7 pin MS with Plug, Avtron/BEI HS35 Pinout **N -** 7 pin MS with Plug, Dynapar HS35 Pinout (Rev Phasing)	**R -** 10 Pin Mini Twistlock with Plug **T -** M12-8 pin w/o Plug, Global Pinout	**U -** M12-8 pin w/o Plug, USA Pinout (Rev Phasing) **2 -** M23-12 Pin w/o Plug, Leine & Linde and Hubner pinout	**3 -** M23-12 Pin w/o Plug, Inverted Hubner Signals **5 -** M12-5 Pin w/o Plug	**7 -** M12-8 pin w/o Plug, Global Pinout (Rev Phasing) **W -** 3.2ft [1m] Cable (also use with special mod 9XX)
FLANGE STYLE									
1 - 58mm w/36mm Pilot, 3x M3 & M4 on 48mm BC	**2 -** 58mm w/50mm Pilot, 3x M4 on 42mm BC	**3 -** 36.5mm Mini-Flange w/33mm Pilot, 4xM3 on 26mm BC	**4 -** 2.63" Square Flange, 1.25" Pilot, 4x 0.22 on 2.06 Sq.	**5 -** 2.63" Round Flange, 2.50" Pilot,3x 10-32 on 1.88 BC & 4x 4-40 on 1.27 BC		**7 -** 42mm HD 316 SST Round Flange, 42mm Pilot, 4x M4 on 35mm BC	**8 -** 2.63" Square Flange, 1.25" Pilot + 3x 10-32 on 1.875" BC	**9 -** 2.50" Round Flange, 1.25" Pilot, 3x 10-32 & 8-32 on 1.88 BC, 3x 6-32 & 4x 4-40 on 2.00 BC	**A -** 2.06" Square Flange, 1.25" Pilot, 4x 0.16 on 1.75" SQ

SHAFT OPTION	HOUSING	SEALS (IP RATING)
A	3, 5	A, G
B	3, 5	A, G
C	All (3, 4*, 5)	A, G, J
R	3, 5	A, G, J
T	3, 5	A, G, J

CONNECTOR CODES	HOUSING	CONNECTOR EXIT
A, B, C, D, E, F, G, H, J, K, M, N, R	3 - 36mm	R - Radial (side) ONLY
	5 - 58mm	A - Axial (end) ONLY
2, 3, 5, T, U, W	3, 4, 5	A,R

CONNECTOR CODES	CHANNEL
A, B, C, D, R, T, U, 2, 3, 7, W	A
E, F, G, H, J, K, M, N	B,E
5	E

ERMEC
ERMEC, S.L. BARCELONA
C/ Francesc Teixidó, 22
08918 Badalona SPAIN
Tel. +34 902 450 160
info@ermec.com
www.ermec.com
ERMEC, S.L. - MADRID
C/ Puerto Rico, 4
28222 Majadahonda (Madrid) SPAIN
bilbao@ermec.com
portugal@ermec.com

AV20 INCREMENTAL ENCODER - Incremental - Optical - Shafted - Light Mill Duty

SPECIFICATIONS

Operating Power:
Volts: 5 - 28 VDC **Current:** 50 mA, no load
Output Format: A Quad B with marker (A, /A, B, /B, Z, /Z) available. A leads B to CW rotation as viewed from the back of the encoder
Frequency Range: 0 to 125 KHz
PPR: 1 - 3600 Standard (for other PPR needs consult factory)
Speed: 6000 RPM Max., (for higher speeds, consult factory)
Axial Load: 100 lb [45 kg] max.
Radial Load: 100 lb [45 kg] max.
Temperature: -40°C to 100°C
Environment: Nema 4/IP65 (when provided with shaft seals)
Vibration: 5-2000 Hz
Shock: 50 G, 11 mS duration
Weight: 0.575 lb [260 g]
Warranty: 2 Year No-Hassle

AV20 encoders are industry standard incremental quadrature rotary encoder units, and fit the same mounting patterns on all machines. That's where the similarity ends. Our AV20 encoders can withstand conditions that make other encoders fail. The solid aluminum housing and stainless steel shaft offer increased durability in tough environments.

AV20 Avtron Encoders have superior shaft seals and bearings that stay sealed to keep contaminants out, through temperature cycling and liquid sprays. Our encoder seals are protected by mechanical barriers to prevent flexing or failure. Avtron Encoders' superior bearings permit much larger side and axial loads for pulley and belt applications, and feature synthetic lubricants for even longer life in all applications.

Many competitive optical encoder designs risk sensor damage from any vibration or shock: sensors ride less than four thousandths of an inch from the thin, often flexible, optical disk spinning at full motor speeds. Some designs even use thin glass disks in "industrial" products! Avtron Encoders use only unbreakable disks and a sensor to disk gap over 8X larger than the competition.

Our optical AV20 encoders are setting a new standard for quality, durability, and performance. Select an AV20 today!

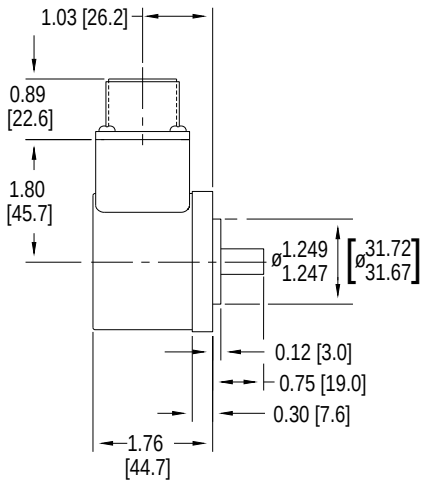

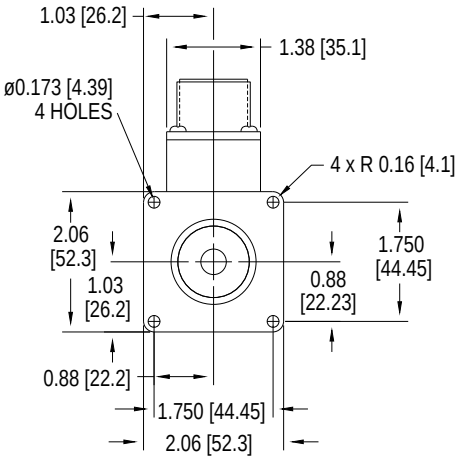

ERMEC
ERMEC, S.L. BARCELONA
C/ Francesc Teixidó, 22
08918 Badalona SPAIN
Tel. +34 902 450 160
info@ermec.com
www.ermec.com
ERMEC, S.L. - MADRID
C/ Puerto Rico, 4
28222 Majadahonda (Madrid) SPAIN
bilbao@ermec.com
portugal@ermec.com

AV20 SELECTION GUIDE

A	V	2	0											

MODEL	PPR	LINE DRIVER	SHAFT SIZE	CONNECTOR OPTIONS	WIRING	MOUNTING STYLE	FACE/BOLT PATTERN	SEALS	CHANNELS	SPECIAL OPTIONS
AV20	**A -** 1 **C -** 25 **F -** 60 **G -** 100 **H -** 120 **K -** 200 **L -** 240 **M -** 250 **N -** 256 **P -** 300 **E -** 360 **Q -** 500 **R -** 512 **S -** 600 **T -** 625 **U -** 720 **W -** 1000 **Y -** 1024 **Z -** 1200 **1 -** 1250 **3 -** 2000 **4 -** 2048 **5 -** 2500 **6 -** 2540 **7 -** 3600	**1 -** 5-28V (7272) **2 -** 5-28V, open collector (7273) **4 -** 5-28V in, 5V out (7272)	**0 -** Non-std. **With Flat** **A -** 0.25” **B -** 0.375” **C -** 10mm **Without Flat** **N -** 0.25” **P -** 0.375” **R -** 10mm	See Table Below	**A -** Side	**1 -** Sq. Flange 2.06” w/ 1.25” male pilot **2 -** Rnd. Flange 2.0” w/ 1.25” male pilot **3 -** Sq. Flange 2.06” w/ 1.181” female pilot **4 -** Rnd. Flange 2.0” w/ 1.181” female pilot	**X -** None **5 -** 4x 6-32 @ 2” **6 -** 4x 10-32 @ 1.625” **7 -** 3x 4-40 @ 1.5”	**A -** Shaft Sealed** **B -** Bearing Sealed **X -** None^^	**With Comp.** **A -** A,/A,B,/B, Z,/Z *** **B -** A,/A,B,/B **D -** A,/A **Without Comp.** **E -** A, B, Z **F -** A, B	**000 -** None **00W -** Connector on 18” cable* **9xx -** Specify cable length xx=feet (use w/ Option “W”)

* only available with “T” & “U” connectors - ** recommended, N/A with Mounting Styles “3” & “4” - *** N/A with MS 6 or 7 Pin Connector. - ^ only available with channel option “A”
^^ not recommended for industrial applications

CONNECTOR				
10 Pin MS	**6 Pin MS**	**7 Pin MS**	**8 Pin M12^**	**Cable**
A - w/o plug (std. phasing) **B -** w/o plug (reverse phasing) **C -** w/ plug (std. phasing) **D -** w/ plug (reverse phasing)	**E -** w/o plug (std. phasing) **F -** w/o plug (reverse phasing) **G -** w/ plug (std. phasing) **H -** w/ plug (reverse phasing)	**J -** w/o plug (std. phasing) **K -** w/o plug (reverse phasing) **M -** w/ plug (std. phasing) **N -** w/ plug (reverse phasing)	**T -** w/o plug (Turck Pinout) **U -** w/o plug (US Pinout)	**W -** 18” cable (pigtail)

ERMEC
ERMEC, S.L. BARCELONA
C/ Francesc Teixidó, 22
08918 Badalona SPAIN
Tel. +34 902 450 160
info@ermec.com
www.ermec.com
ERMEC, S.L. - MADRID
C/ Puerto Rico, 4
28222 Majadahonda (Madrid) SPAIN
bilbao@ermec.com
portugal@ermec.com

AV25 INCREMENTAL ENCODER - Incremental - Optical - Shafted - Light Mill Duty

SPECIFICATIONS

Operating Power:
Volts: 5 - 28 VDC **Current:** 50 mA, no load
Output Format: A, /A, B, /B, Z, /Z available. A leads B to CW rotation as viewed from the back of the encoder
Frequency Range: 0 to 125 KHz
PPR: 1 - 5000 Standard
Speed: 6000 RPM Max., (for higher speeds, consult factory)
Temperature: -40°C to 100°C
Vibration: 5-2000 Hz
Shock: 50 G, 11 mS duration
Weight: 0.95 lb [431 g]
Warranty: 2 Year No-Hassle

AV25 incremental quadrature rotary encoders fit a vast array of applications, from coupled AC and DC motor shafts, servos, conveyors, and most any machine.The solid aluminum housing, and stainless steel shaft offer increased durability in tough environments. Also available: AV20 encoders for 2.0" flanges and AV45 for 85mm flanges.

Rotary Avtron Encoders have superior shaft seals and bearings that stay sealed to keep contaminants out, through temperature cycling and liquid sprays. Our encoder seals are protected by mechanical barriers to prevent flexing or failure. Superior Avtron Encoder bearings permit much larger side and axial loads for pulley and belt applications, and feature synthetic lubricants for even longer life in all applications.

Many competitive optical encoder designs risk sensor damage from any vibration or shock: sensors ride less than four thousandths of an inch from the thin, often flexible, optical disk spinning at full motor speeds. Some designs even use thin glass disks in "industrial" products! Avtron Encoders use only unbreakable disks and a sensor to disk gap over 8X larger than the competition.

Our optical AV25 encoders use superior sensor, disk, bearing, and seal technology to give top performance in industrial conditions. Select an AV25 today!

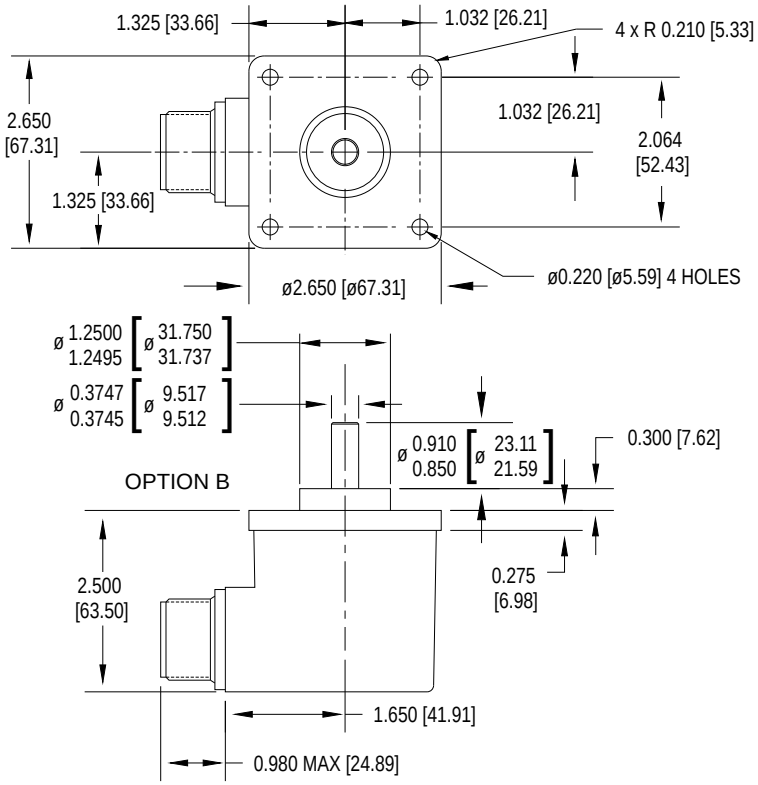

ERMEC
ERMEC, S.L. BARCELONA
C/ Francesc Teixidó, 22
08918 Badalona SPAIN
Tel. +34 902 450 160
info@ermec.com
www.ermec.com
ERMEC, S.L. - MADRID
C/ Puerto Rico, 4
28222 Majadahonda (Madrid) SPAIN
bilbao@ermec.com
portugal@ermec.com

AV25 SELECTION GUIDE

A	V	2	5										

MODEL	PPR	LINE DRIVER	SHAFT SIZE	CONNECTOR OPTIONS	WIRING	MOUNTING STYLE	FACE/BOLT PATTERN	SEALS	CHANNELS	SPECIAL OPTIONS
AV25	**A -** 1 **C -** 25 **F -** 60 **G -** 100 **H -** 120 **K -** 200 **L -** 240 **M -** 250 **N -** 256 **P -** 300 **E -** 360 **Q -** 500 **R -** 512 **S -** 600 **T -** 625 **U -** 720 **V -** 900 **W -** 1000 **Y -** 1024 **Z -** 1200 **1 -** 1250 **3 -** 2000 **4 -** 2048 **5 -** 2500 **6 -** 2540 **7 -** 3600 **D -** 4096 **9 -** 5000	**1 -** 5-28V (7272) **2 -** 5-28V, open collector (7273) **3 -** 5-15V (4469) **4 -** 5-28V in, 5V out (7272)	**0 -** Non-std. **With Flat** **A -** 0.25” **B -** 0.375” **C -** 10mm **Without Flat** **N -** 0.25” **P -** 0.375” **R -** 10mm	See Table Below	**A -** Side **E -** End	**1 -** Sq. Flange 2.625” w/ 1.25” male pilot **2 -** Rnd. Flange 2.5” w/ 1.25” male pilot **3 -** Rnd. Flange 2.62” no pilot	**X -** None **1 -** 3x 10-32 @ 1.875” **2 -** 4x 4-40 @ 1.272”^ **3 -** 4x 4-40 @ 2” **4 -** 3x 6-32 @ 2”	**A -** Shaft Sealed** **B -** Bearing Sealed **X -** None^^	**With Comp.** **A -** A,/A,B,/B, Z,/Z *** **B -** A,/A,B,/B **D -** A,/A **Without Comp.** **E -** A, B, Z **F -** A, B	**000 -** None **00W -** Connector on 18” cable* **9xx -** Specify cable length xx=feet (use w/ Option “W”)

* only available with “T” & “U” connectors - ** recommended, N/A with Mounting Styles “3” & “4” - *** N/A with MS 6 or 7 Pin Connector. - ^ only available with channel option “A”
^^ not recommended for industrial applications

CONNECTOR				
10 Pin MS	**6 Pin MS**	**7 Pin MS**	**8 Pin M12^**	**Cable**
A - w/o plug (std. phasing) **B -** w/o plug (reverse phasing) **C -** w/ plug (std. phasing) **D -** w/ plug (reverse phasing)	**E -** w/o plug (std. phasing) **F -** w/o plug (reverse phasing) **G -** w/ plug (std. phasing) **H -** w/ plug (reverse phasing)	**J -** w/o plug (std. phasing) **K -** w/o plug (reverse phasing) **M -** w/ plug (std. phasing) **N -** w/ plug (reverse phasing)	**T -** w/o plug (Turck Pinout) **U -** w/o plug (US Pinout)	**W -** 18” cable (pigtail)

ERMEC
ERMEC, S.L. BARCELONA
C/ Francesc Teixidó, 22
08918 Badalona SPAIN
Tel. +34 902 450 160
info@ermec.com
www.ermec.com
ERMEC, S.L. - MADRID
C/ Puerto Rico, 4
28222 Majadahonda (Madrid) SPAIN
bilbao@ermec.com
portugal@ermec.com

AV44 ENCODER - Incremental - Magnetic - Shafted - Heavy Mill Duty

SPECIFICATIONS

Operating Power:
Volts: 6-30 VDC **Current:** 80 mA, no load
Output Format: A Quad B with marker (A, /A, B, /B, Z, /Z)
Frequency Range: 0 to 250 KHz @ 6 V & 1 m cable
PPR: 1 - 10000 standard (for other PPR needs, consult factory)
Speed: 6000 RPM Max., (for higher speeds, consult factory)
Temperature: -30°C to 85°C std, *optional: -40°C to 100°C
Environmental: IP66 housing with fully encapsulated electronics
Vibration: 10-2000 Hz, 17 G
Shock: 275 G, 6 mS duration
Weight: 2.5 lb [635 g] approx
Certifications: CE, UL 508 (pending)

The AV44 offers high performance, magnetic durability and moisture resistance in a compact package with drop-in ease of replacement at a great value.

Avtron AV44 encoders offer an 11mm shaft with a “B10 Euroflange” and a 5/16” shaft with a “PY” flange, or the option to foot-mount for a wide range of industrial applications.

Avtron encoders have superior shaft seals and bearings that stay sealed to keep out contamination caused by temperature cycling and liquid sprays.

The AV44 offers high power outputs that can drive cables up to 1000’ [300m] with full short circuit and over-voltage protection!

On-board diagnostics check all aspects of the encoder - from the sensor to the output line driver circuit - and provide a clear indicator that the encoder is working well. No more fumbling with a PC or oscilloscope to determine if your encoder is working properly!

Often, optical encoders fail because of dust or water contamination that prevents the sensor from seeing the optical disk. The AV44 advanced magnetic technology sees through contamination. The fully potted circuit board that ignores water, oil, dust and dirt. This ensures your machine keeps working, even in the toughest application environments.

Select an Avtron AV44 and upgrade your machine today!

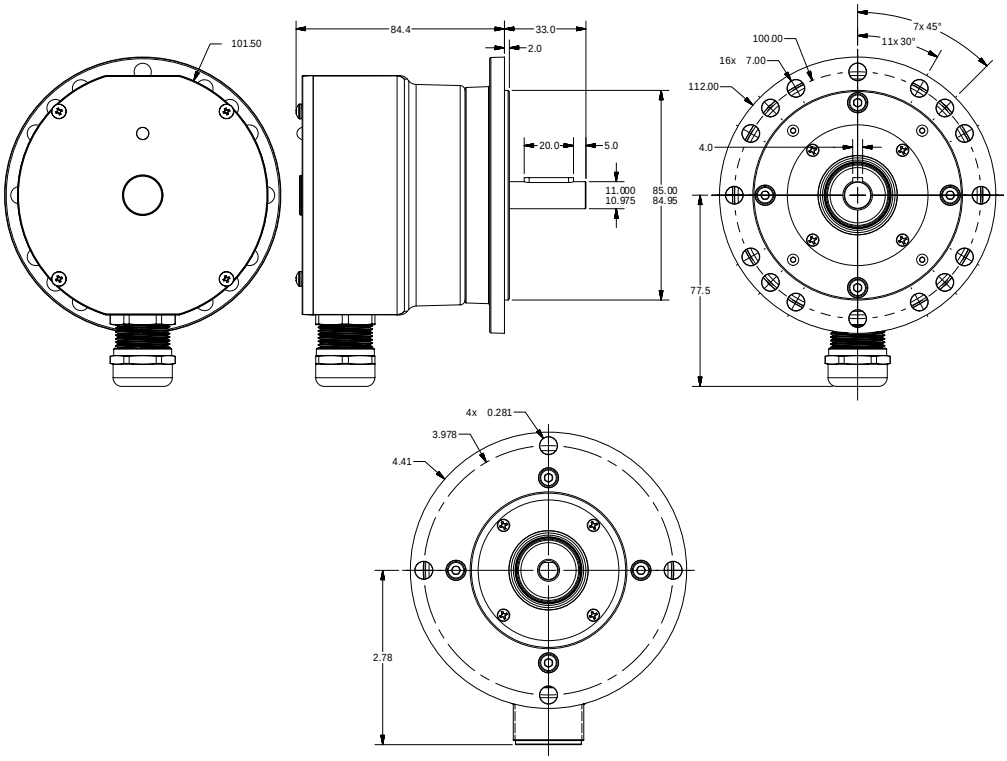

ERMEC
ERMEC, S.L. BARCELONA
C/ Francesc Teixidó, 22
08918 Badalona SPAIN
Tel. +34 902 450 160
info@ermec.com
www.ermec.com
ERMEC, S.L. - MADRID
C/ Puerto Rico, 4
28222 Majadahonda (Madrid) SPAIN
bilbao@ermec.com
portugal@ermec.com

AV44 SELECTION GUIDE

| A | V | 4 | 4 | | |

AV45 EUROSMART™ ENCODER - Incremental - Magnetic - Shafted - Heavy Mill Duty

AV45 EUROSMART™ heavy mill duty solid shaft magnetic incremental quadrature rotary encoders fit European B10 (85mm) flanges with 100mm bolt circles, and offer 10 or 11mm shaft sizes. AV45 also offers foot mounting, with bolt patterns to match Hubner POG/OG styles, PGH4 styles, and Toshiba foot-mounted resolvers. Also available: AV115 modular magnetic to fit flanges using a no-bearing design & HS45 EUROSMART™ hollow shaft models.

EUROSMART™ encoders feature durable construction, simple installation, and clear diagnostics to eliminate encoder-related downtime:

AV45 built-in magnetic sensors are fully potted to withstand dirt and liquids and extreme temperature changes. No glass disks, no optics to clog. Bigger bearings and superior seals far outlast any comparable model.

The AV45 enables you to change the electrical connector in the field or at your Avtron Encoders distributor for maximum flexibility and the shortest delivery times! The universal 5-24V design drives longer cables and is protected against wiring errors and surges.

The AV45 easily replaces competitive models, and the incredible durability ensures it is the last replacement encoder you will ever need!

SPECIFICATIONS

Operating Power:
Volts: 5-24 VDC **Current:** 100 mA, no load
Output Format: A Quad B with marker (A, /A, B, /B, Z, /Z)
Second Isolated Output: Optional
Frequency Range: 0 to 165 KHz
PPR: 8-5000
Speed: 5000 RPM Max. std., for higher speeds, consult factory
Enclosure: IP65
Electronics: Fully Encapsulated, IP67**
Temperature: -40°C to +100°C
Vibration: 18 G
Shock: 100 G
Weight: 10-12 lb [4.5-5 kg] approx
Chemical: Polyurethane enamel paint protects against salt spray, mild acids, and bases
Warranty: 3 Year No-Hassle
**Connector option "W", connector options may reduce IP rating.

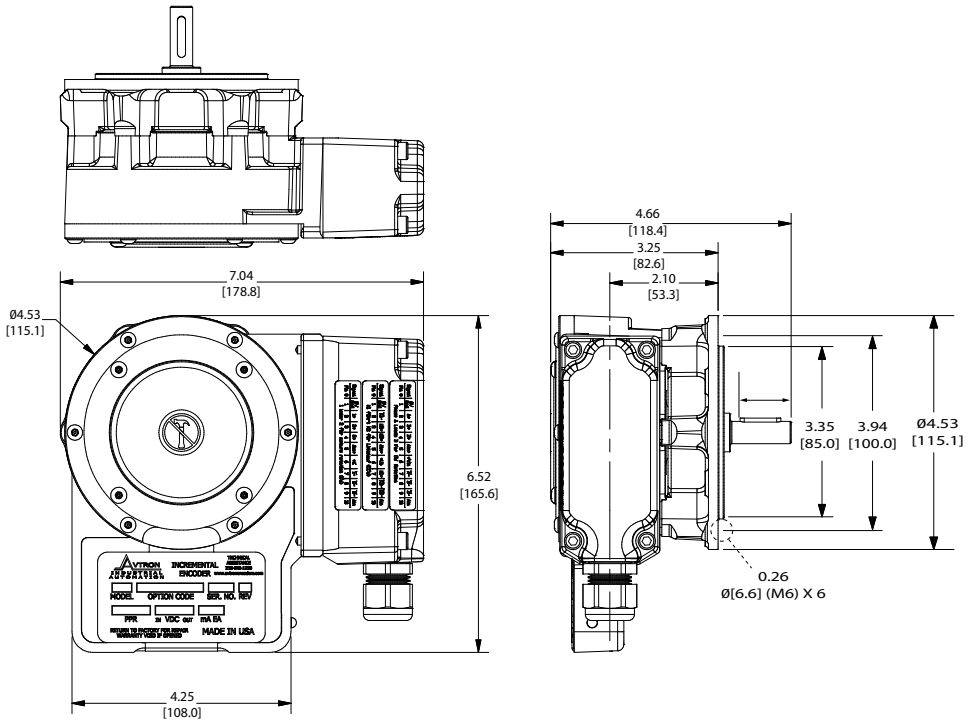

ERMEC
ERMEC, S.L. BARCELONA
C/ Francesc Teixidó, 22
08918 Badalona SPAIN
Tel. +34 902 450 160
info@ermec.com
www.ermec.com
ERMEC, S.L. - MADRID
C/ Puerto Rico, 4
28222 Majadahonda (Madrid) SPAIN
bilbao@ermec.com
portugal@ermec.com

AV45 SELECTION GUIDE

A	V	4	5																	

MODEL	SHAFT SIZE	LEFT OUTPUT PPR	RIGHT OUTPUT PPR	LINE DRIVER	CONNECTOR OPTIONS	FOOT MOUNT BRACKET	CHANNELS	SPECIAL OPTIONS
AV45	**H -** 11mm, standard **N -** 10mm **P -** 12mm **S -** 16mm **T -** 18mm **Q -** 0.500"*	**XX -** None **BC -** 50 **AF -** 60 **AK -** 80 **AG -** 100 **AH -** 120 **AA -** 128 **AM -** 200 **AL -** 240 **AN -** 256 **AP -** 300 **AE -** 360 **AC -** 400 **AB -** 480 **AQ -** 500 **AR -** 512 **AS -** 600 **AU -** 720 **AV -** 900 **AJ -** 960 **AW -** 1000 **AY -** 1024 **AZ -** 1200 **CX -** 1500 **A3 -** 2000 **A4 -** 2048 **BA -** 2400 **A5 -** 2500 **CG -** 3000 **AT -** 3072 **A7 -** 3600 **BB -** 4000 **AD -** 4096 **A8 -** 4800 **A9 -** 5000 **A0 -** Special	**XX -** None **BC -** 50 **AF -** 60 **AK -** 80 **AG -** 100 **AH -** 120 **AA -** 128 **AM -** 200 **AL -** 240 **AN -** 256 **AP -** 300 **AE -** 360 **AC -** 400 **AB -** 480 **AQ -** 500 **AR -** 512 **AS -** 600 **AU -** 720 **AV -** 900 **AJ -** 960 **AW -** 1000 **AY -** 1024 **AZ -** 1200 **CX -** 1500 **A3 -** 2000 **A4 -** 2048 **BA -** 2400 **A5 -** 2500 **CG -** 3000 **AT -** 3072 **A7 -** 3600 **BB -** 4000 **AD -** 4096 **A8 -** 4800 **A9 -** 5000 **A0 -** Special	**6 -** 5-24V in/out (7272) **8 -** 5-24V in/out Hi-Power (Hx) **9 -** 5-24V in, 5V out (7272)	See Table Below	**X -** None (for B10 flange mount) **1 -** Toshiba TS2113N bolt pattern (recommend "T" 18mm shaft) (B35529 bracket) **2 -** POGxx, OGxx Hubner (Baumer) bolt pattern (B35555 bracket) **3 -** FG4 Johannes Hubner bolt pattern (B35338 bracket) **4 -** Foot mount for Toshiba type MSP **5 -** 2.50" pilot flange	**A -** A,/B,/A,B,/Z,Z (req'd for 8, 10 pin connectors) **B -** A,/B,/A,B (no marker) **D -** A,/A **E -** A,B,Z (single ended) **F -** A,B (single ended, no marker)	**000 -** None **001 -** Isolated ceramic bearings** **004 -** Super Magnetic Shielding **6xx -** Add over speed switch xx=speed code **9xx -** Specify cable length xx=feet max 33ft (use w/ Option "W")

* not available with over speed - ** not available on shaft options "S" & "Q"

CONNECTOR							
10 Pin MS Connector-Small Encoder Pinout	**10 Pin MS Connector-Large Encoder Pinout**	**6 Pin MS Connector-Small Encoder Pinout**	**7 Pin MS Connector-Small Encoder Pinout**	**Small EPIC Connector**	**Terminal Box w/terminal strip**	**8 Pin M12 Connector**	**12 Pin M23 Connector**
A - Avtron/BEI Pinout, w/o plug **B -** Dynapar HS35 Pinout, w/o plug **C -** Avtron/BEI Pinout, mating plug **D -** Dynapar HS35 Pinout, mating plug **Y -** 12" cable w/plug	**4 -** Avtron/ Northstar Pinout, mating plug	**E -** Avtron/BEI Pinout, w/o plug **F -** Dynapar HS35 Pinout, w/o plug	**J -** Avtron/BEI Pinout, w/o plug **K -** Dynapar HS35 Pinout, w/o plug **M -** 4 foot cable w/o plug, channel B	**P -** Avtron pinout, w/mate **G -** Northstar pinout w/mate **Q -** Avtron pinout on remote base, 18" cable w/ mate **Z -** Avtron pinout on 18" cable w/ mate	**H -** USA, 1/2" conduit **L -** Europe w/ cord grip	**T -** Global pinout, w/o plug **U -** USA Pinout, w/o plug	**2 -** Leine and Linde pinout, w/o plug **3 -** Hubner Pinout w/o plug **W -** Cable 3' (or special length) **R -** Mini Twist Lock (Mini MS) w/ mating plug **V -** Mini Twist Lock (Mini MS) w/ mating plug (Reverse Phasing) **S -** Mini Twist Lock (Mini MS) on 3' cable w/ mating plug **N -** Mini Twist Lock (Mini MS) w/o plug (Reverse Phasing)

ERMEC
ERMEC, S.L. BARCELONA
C/ Francesc Teixidó, 22
08918 Badalona SPAIN
Tel. +34 902 450 160
info@ermec.com
www.ermec.com
ERMEC, S.L. - MADRID
C/ Puerto Rico, 4
28222 Majadahonda (Madrid) SPAIN
bilbao@ermec.com
portugal@ermec.com

AV485 SMARTACH™ III ENCODER - Incremental - Magnetic - Shafted - Severe Mill Duty

SPECIFICATIONS

Operating Power:
Volts: 5 - 24 VDC **Current:** 100 mA nom, no load
Output Format: A Quad B with Marker (A, /A, B, /B, Z, /Z)
Second Isolated Output: Optional
Frequency Range: @5 V, @1 m cable, 250 kHz Max @24 V, @300 m cable, #8 output, 45 kHz Max
Maximum Cable Length: 1000'
PPR: 4 - 50000
Speed: 5000 RPM Max
Electronics: Fully Encapsulated, IP67
Temperature: -40°C to 120°C
Vibration: 18 G
Shock: 1 meter drop test
Chemical: Polyurethane enamel paint protects against salt spray, mild acids, and bases.
Weight: 14 lb [6.4 kg] / 16 lb [7.3 kg] dual output
Warranty: 1 Year No-Hassle

AV485 SMARTach™ III severe duty magnetic encoders can be foot or NEMA 56C face/flange mounted. They feature our largest bearings on an ultra-wide stance for pulley and other rough applications. Also available: AV685 for hollow shaft mounting, and AV850 encoders for complete flowerpot/flange/coupling elimination.
The AV485 is designed to withstand the worst environments: buried in slag, coated in pulp, sprayed with salt water or cutting coolants, it keeps working. The modular, gull-winged design makes it easy to install and service; the base can be bolted in place without removing the encoder, and the AV5 Wide-gap™ removable sensors require no adjustment or shimming.

The sensors are fully potted to protect against liquids, and are interchangeable between AV850, AV485, and AV685 encoders. The universal 5-24V design drives longer cables and is protected against wiring errors and surges. A second backup output is available with the same or different PPR, and offers completely separate electronics for maximum uptime.

Adaptive Electronics: at power-up you know you installed it right! The green LED tells you your AV5 Sensor is aligned with the rotor and reading signal. If at any time, the AV5 cannot produce consistent signals, the LED changes to red and the optional remote alarm contact activates. However, the encoder keeps working to give you time to schedule service. Even wiring errors and short circuits that cause an over-temp situation will be detected and indicated by changing the LED to orange.

For easy upgrades, the AV485 matches the bolt pattern and shaft location of older analog and digital models.

Keep your mill running today, and for years to come: install AV485!

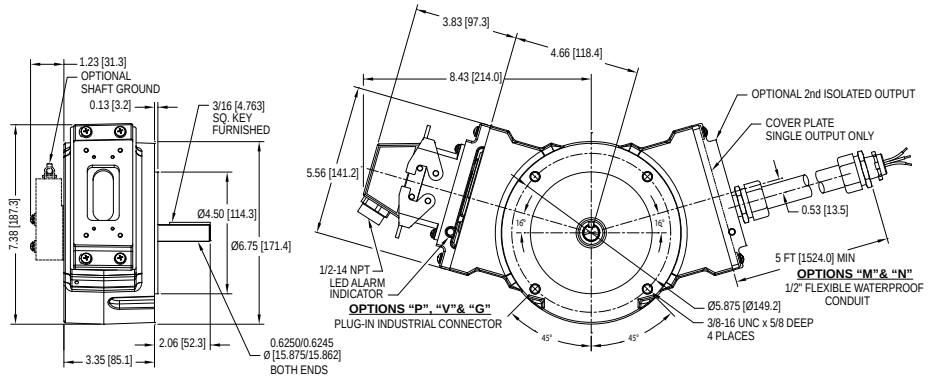

ERMEC
ERMEC, S.L. BARCELONA
C/ Francesc Teixidó, 22
08918 Badalona SPAIN
Tel. +34 902 450 160
info@ermec.com
www.ermec.com
ERMEC, S.L. - MADRID
C/ Puerto Rico, 4
28222 Majadahonda (Madrid) SPAIN
bilbao@ermec.com
portugal@ermec.com

AV485 SELECTION GUIDE

A	V	4	8	5											

MODEL	TEMP RATING	FOOT BRACKET	MOUNTING STYLE	LEFT MODULE		RIGHT MODULE		CONNECTOR OPTIONS	SPECIAL OPTIONS
				LINE DRIVER	PPR	LINE DRIVER	PPR		
AV485	**N -** -20°C to 80°C **C -** -40°C to 80°C **H -** -20°C to 120°C (w/Vortex Cooler)	**X -** None **1 -** A36261 STD **2 -** BC42/46 style (A25448)	**S -** single shaft **D -** dual shaft **G -** grounding	**X -** None **6 -** 5-24V in/out (7272) **8 -** 5-24V in/out Hi-Power (Hx) **9 -** 5-24V in, 5V out (7272)	**X -** None **F -** 60 **C -** 64 **G -** 100 **H -** 120 **A -** 128 **L -** 240 **N -** 256 **P -** 300 **E -** 360 **B -** 480 **Q -** 500 **R -** 512 **S -** 600 **U -** 720 **V -** 900 **J -** 960 **W -** 1000 **Y -** 1024 **Z -** 1200 **2 -** 1500 **6 -** 1800 **3 -** 2000 **4 -** 2048 **5 -** 2500 **D -** 4096 **8 -** 4800 **9 -** 5000 **0 -** special	**X -** None **6 -** 5-24V in/out (7272) **8 -** 5-24V in/out Hi-Power (Hx) **9 -** 5-24V in, 5V out (7272)	**X -** None **F -** 60 **C -** 64 **G -** 100 **H -** 120 **A -** 128 **L -** 240 **N -** 256 **P -** 300 **E -** 360 **B -** 480 **Q -** 500 **R -** 512 **S -** 600 **U -** 720 **V -** 900 **J -** 960 **W -** 1000 **Y -** 1024 **Z -** 1200 **2 -** 1500 **6 -** 1800 **3 -** 2000 **4 -** 2048 **5 -** 2500 **D -** 4096 **8 -** 4800 **9 -** 5000 **0 -** special	See Table Below	**000 -** None **003 -** Include analog signal converter (K661) **004 -** Super magnetic shielding **4xx -** Special PPR **9xx -** Special cable length

CONNECTOR OPTIONS							
Mounted on Encoder						Cable	Flexible Conduit
10 pin MS	10 pin EPIC	10 pin mini EPIC	10 pin mini	5 pin MS	6 pin MS		
A - without plug **B -** with Plug **C -** with plug & flex conduit adapter **L -** with right angle plug **5 -** w/o plug (Dynapar pinout)	**P -** with plug **G -** (Northstar™ Pinout) with plug **V -** with Plug, w/ insulated adapter	**1 -** w/ plug	**R -** w/ plug	**E -** w/o plug (M737) **F -** w/ plug (M737) **H -** w/o plug (M727) **J -** w/ plug (M727)	**3 -** w/ plug	**W -** 3' flex sealed **Q -** 18" flex 10 pin EPIC w/ plug, adapter block **Z -** 3' flex w/ EPIC and plug **S -** 10 pin mini w/ plug, 3'	**D -** 10 pin MS, w/ plug, 5' **M -** Wire leads only, 5' w/ adapter **K -** Wire leads only **N -** Wire leads only, 5' **T -** Terminal box 5' **Y -** Terminal box, 5' w/ adapter

SPECIAL PPR OPTION CODES		
OPTION CODE	LEFT PPR	RIGHT PPR
401	1270	None
402	150	None
403	50	None
404	512	16
405	16	None
406	6000	None
407	2800	None
408	1400	None
409	30	None
410	None	6000
411	1200	None
412	200	None
413	30	30
414	1500	None
415	3000	None
416	3600	None
417	1250	None
418	2400	2400
419	160	160
420	450	None

ERMEC
ERMEC, S.L. BARCELONA
C/ Francesc Teixidó, 22
08918 Badalona SPAIN
Tel. +34 902 450 160
info@ermec.com
www.ermec.com
ERMEC, S.L. - MADRID
C/ Puerto Rico, 4
28222 Majadahonda (Madrid) SPAIN
bilbao@ermec.com
portugal@ermec.com

AV5 & AV12 SMARTACH™ III SENSOR MODULE - Incremental - Magnetic - Sensor - Severe Mill Duty

SPECIFICATIONS

Operating Power:
Volts: 5 - 24 VDC **Current:** 100 mA nom, no load
Output Format: A Quad B with Marker (A, /A, B, /B, Z, /Z)
Second Isolated Output: Optional
Frequency Range: @5 V, @1 m cable, 250 kHz Max @24 V, @300 m cable, #8 output, 45 kHz Max
Maximum Cable Length: 1000'
PPR: 4 - 50000
Speed: 5400 RPM Max
Electronics: Fully Encapsulated, IP67
Temperature: -40°C to 120°C
Vibration: 18 G
Shock: 1 meter drop test
Chemical: Polyurethane enamel paint protects against salt spray, mild acids, and bases.
Weight: 2 - 3 lb [0.9 - 1.36 kg] (will vary by connector options)
Warranty: 1 Year No-Hassle

AV5 SMARTach™ III sensors are magnetoresistive, severe duty incremental quadrature sensors for the AV485, AV685, or AV850 rotary encoders. The AV5 is also usable in applications where an encoder housing is not needed – simply mount the AV5 with your bracket, and use an AV850 or other rotor. Also available: XR5 and XR12 sensors for hazardous duty applications or XP5 for applications where explosion proof is a requirement.

The AV5 is ideal for applications where mounting on a large diameter through-shaft is needed, including large hollow shafts for cooling water or air. The AV5 sensor + AV850 rotor combination permits through-shafts up to 4.5" [115mm].

The AV5 offers a full range of electrical connector options, including IP67 cable, IP66 MS connectors, and IP65 Industrial with built-in terminal strips. The AV5 sensor is fully protected against all types of wiring errors, including short circuits, reverse voltage, and phase-to-phase shorts. It is one tough sensor! For larger bore applications, use AV12 sensors with the AV125 encoder (or as stand-alone).

The universal 5-24V design drives longer cables and is protected against wiring errors and surges.

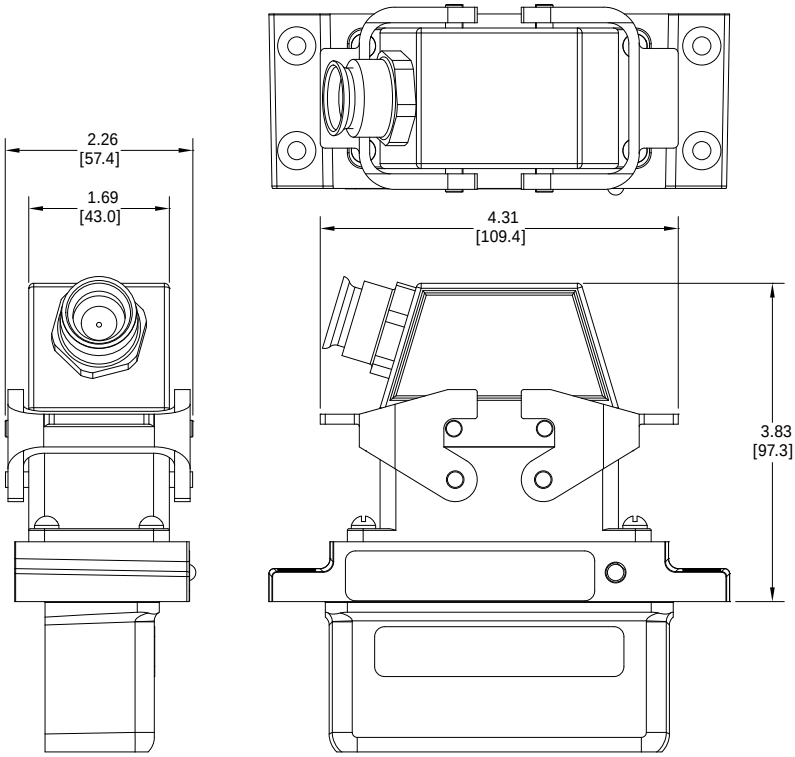

ERMEC
ERMEC, S.L. BARCELONA
C/ Francesc Teixidó, 22
08918 Badalona SPAIN
Tel. +34 902 450 160
info@ermec.com
www.ermec.com
ERMEC, S.L. - MADRID
C/ Puerto Rico, 4
28222 Majadahonda (Madrid) SPAIN
bilbao@ermec.com
portugal@ermec.com

AV5 & AV12 SELECTION GUIDE

MODEL	LINE DRIVER	PPR	CONNECTOR OPTIONS	SPECIAL OPTIONS
AV5- or AV12-	**6 -** 5-24 VDC (7272) **8 -** 5-24 VDC Hi-Power (Hx) **9 -** 5-24 VDC/ 5V out (7272)	**X -** None **F -** 60 **C -** 64 **G -** 100 **H -** 120 **A -** 128 **L -** 240 **N -** 256 **P -** 300 **E -** 360 **B -** 480 **Q -** 500 **R -** 512 **S -** 600 **U -** 720 **V -** 900 **J -** 960 **W -** 1000 **Y -** 1024 **Z -** 1200 **2 -** 1500 **6 -** 1800 **3 -** 2000 **4 -** 2048 **5 -** 2500 **D -** 4096 **8 -** 4800 **9 -** 5000 **0 -** Special	See Table Below	**000 -** None **004 -** Super Magnetic Shielding **4xx -** Special PPR (See Table Below) **9xx -** Special Cable Length (xx=ft/0.3m) **Wxx -** Custom cableing (xx=ft/0.3m) (use W00 for std. 18" cable)**

** only available with connector option "B" and line driver option "8" ***Only Available on AV12

CONNECTOR OPTIONS								
Mounted on Encoder							Cable	Flexible Conduit
10 pin MS	10 pin EPIC	10 pin mini EPIC	10 pin mini	5 pin MS	6 pin MS	7 pin MS		
A - without plug **B -** with Plug **C -** with plug & flex conduit adapter **L -** with right angle plug **5 -** w/o plug (Dynapar pinout)	**P -** with plug **G -** (Northstar™ Pinout) with plug **V -** with Plug, w/ insulated adapter	**1 -** w/ plug	**R -** w/ plug	**E -** w/o plug (M737) **F -** w/ plug (M737) **H -** w/o plug (M727) **J -** w/ plug (M727)	**3 -** w/ plug	**7 -** w/o plug	**W -** 3' flex sealed **Q -** 18" flex 10 pin EPIC w/ plug, adapter block **Z -** 3' flex w/ EPIC and plug **S -** 10 pin mini w/ plug, 3' **4 -** 2m (Hubner pinout)***	**D -** 10 pin MS, w/ plug, 5' **M -** Wire leads only, 5' w/ adapter **K -** Wire leads only **N -** Wire leads only, 5' **T -** Terminal box 5' **Y -** Terminal box, 5' w/ adapter **2 -** 3/4" NPT, w/ terminal plug***

SPECIAL PPR OPTION CODES		
OPTION CODE	LEFT PPR	RIGHT PPR
401	1270	None
402	150	None
403	50	None
404	512	16
405	16	None
406	6000	None
407	2800	None
408	1400	None
409	30	None
410	None	6000
411	1200	None
412	200	None
413	30	30
414	1500	None
415	3000	None
416	3600	None
417	1250	None
418	2400	2400
419	160	160
420	450	None

ERMEC, S.L. BARCELONA
C/ Francesc Teixidó, 22
08918 Badalona SPAIN
Tel. +34 902 450 160
info@ermec.com
www.ermec.com
ERMEC, S.L. - MADRID
C/ Puerto Rico, 4
28222 Majadahonda (Madrid) SPAIN
bilbao@ermec.com
portugal@ermec.com

HS6A ENCODER -Absolute - Optical - Hollow Shaft - Light Mill Duty

SPECIFICATIONS

Operating Power:
Volts: 10 - 30 VDC **Current:** 230 mA at 10 V, 100 mA at 24 V maximum*
Output Formats: Ethernet/IP*, Modbus TCP*, Profinet*, Powerlink, Profibus, CANOpen, DeviceNet, SSI, Parallel
Accuracy: +/-0.02° (+/-1 arc-min)
Shaft Loading: axial 9 lb [40 N], radial 25 lb [110 N]
Temperature: -40°C to 85°C*
Environment: IP66**
Vibration: 10 G, 10-1000 Hz
Shock: 30 G, 11 mS duration
Weight: 1.21 lb [550 g]; stainless option 2.7 lb [1200 g]
Warranty: 2 Year No-Hassle
*(Ethernet versions require 400 mA @ 10 V or 160 mA @ 24 V)
**with standard recommended seals

HS6A absolute rotary hollow shaft encoders fit shafts from 0.3" to 0.6" [8-15mm], and offer superior durability compared to ordinary optical absolute encoders. Also available: AV6A solid shaft flange-mounted models, HS6M magnetic absolute encoders, HS40 severe-duty absolute magnetic encoders that fit shafts 5/8 - 1 1/8" [16-30mm].

HS6A encoders have superior shaft seals and bearings that stay sealed to keep contaminants out, despite temperature cycles or liquid sprays. Our encoder seals are protected by mechanical barriers to prevent flexing or failure. Superior Avtron Encoder bearings outlast the competition, even when mounting stub shafts have increased runout.

Many competitive optical encoder designs risk sensor damage from any vibration or shock. Some designs even use thin glass disks in "industrial" products! Avtron Encoders uses only unbreakable disks.

The HS6A offers a broad range of communication options, from parallel output and SSI to the latest Profibus and Ethernet standards.

Our optical HS6A encoders use superior sensor, disk, bearing, and seal technology to give top performance in industrial conditions. Select an HS6A today!

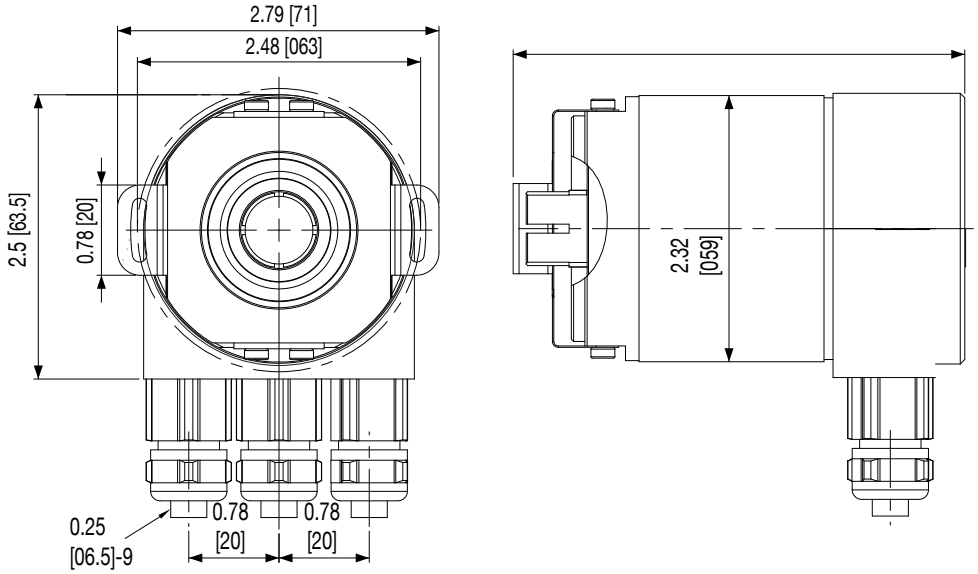

ERMEC
ERMEC, S.L. BARCELONA
C/ Francesc Teixidó, 22
08918 Badalona SPAIN
Tel. +34 902 450 160
info@ermec.com
www.ermec.com
ERMEC, S.L. - MADRID
C/ Puerto Rico, 4
28222 Majadahonda (Madrid) SPAIN
bilbao@ermec.com
portugal@ermec.com

HS6A SELECTION GUIDE

H	S	6	A											

MODEL	BUS	FLANGE	BORE SIZE	TURNS/BITS	PPR/BITS PER TURN	CONNECTOR	MOUNTING STYLE	OUTPUT CODE	SEALS	SPECIAL OPTIONS
HS6A	**B -** Incremental + SSI **C -** CANOpen **D -** DeviceNet **K -** Powerlink **L -** Parallel **M -** Modbus Ethernet **N -** Profinet **P -** Profibus DP **R -** Ethernet/IP **S -** SSI	**1 -** 58mm housing **A -** 58mm housing with protective basket	**A -** 3/8” **B -** 1/2” **C -** 5/8” **D -** 1/4” **M -** 8mm **N -** 10mm **P -** 12mm **Q -** 14mm (EOS only) **R -** 15mm (EOS only) **Z -** All metric sizes (15mm native bore) **Y -** All US sizes (5/8” native bore)	**X -** 0/0 single turn **A -** 16/4 **D -** 128/7 **E -** 256/8 **2 -** 4096/12 **4 -** 16384/14	**E -** 256/8 **F -** 512/9 **0 -** 1024/10 **2 -** 4096/12 **3 -** 8192/13 **6 -** 65536/16	**A -** 1xM12/5 pin **B -** 2xM12/5 pin **C -** 3xM12 **D -** 2xM12/4 pin **E -** M12/8 pin **F -** M23/12 pin **G -** 26 pin **J -** 2x cable entry **K -** 3x cable entry **L -** 10 pin MS **M -** M23/8 pin Hengstler **N -** M23/8 pin Stegmann **Q -** M23/8 pin Kubler **R -** M23/16 pin w/o plug **W -** Cable, 1m	**A -** Radial (EOS only) **E -** Axial (EOS only) **U -** EOS or Thru (SSI only, radial exit)	**1 -** Binary bit coding **2 -** Grey coding	**X -** IP54 **A -** IP66 shaft seals **S -** IP66 seals, stainless housing	**000 -** No special features **9xx -** Specify cable length xx=feet 0.3m

CONNECTOR COMPATABLITY TABLE			
BUS	**BUS CODE**	**CONNECTOR**	**EXIT**
CANOpen	C	A, B, C, J, K, W	E, A
DeviceNet	D	A, B, C, J, K, W	E, A
Powerlink	K	D	E, A
Parallel	L	G, W, R	E, A
Modbus	M	D	E, A
Profinet	N	C	E, A
Profibus	P	C, K	E, A
Ethernet/IP	R	C	E, A
SSI	S	E, F, Q, R, W	E, A, U

ERMEC
ERMEC, S.L. BARCELONA
C/ Francesc Teixidó, 22
08918 Badalona SPAIN
Tel. +34 902 450 160
info@ermec.com
www.ermec.com
ERMEC, S.L. - MADRID
C/ Puerto Rico, 4
28222 Majadahonda (Madrid) SPAIN
bilbao@ermec.com
portugal@ermec.com

HS6M ENCODER -Absolute - Magnetic - Hollow Shaft - Light Mill Duty

SPECIFICATIONS

Operating Power:
- **SSI:** 5-30 VDC; 30 mA @ 24 VDC, 125 mA @ 5 VDC
- **Analog V Out:** 12-30 VDC; 15 mA @ 24 V
- **Analog I Out:** 15-30 VDC; 40 mA @ 24 V

Output Format: Analog, CANOpen, J1939, Profinet IO, Profibus, SSI
Accuracy: +/-0.09° (+/-5 arc-min)
Temperature: -30°C to +85°C
Environmental: IP65
Vibration: 10-1000Hz, 10 G
Shock: 200 G, 3 mSec
Weight: 0.33 lb [150 g]
Certifications: CE
Warranty: 2 Year No-Hassle

HS6M hollow shaft magnetic absolute rotary encoders offer excellent performance and durability in a cost-effective package. By utilizing Wiegand wire energy harvesting technology combined with magnetic sensors, we have created an absolute Avtron Encoder design which requires no batteries, long-term capacitors, glass disks, or gears! Also available: solid shaft model (AV6M), severe duty models (AV30, HS40), as well as optical models (AV6A, HS6A) for ultra-precision applications.

HS6M encoders have superior shaft seals and bearings that stay sealed to keep contaminants out, through temperature cycling and liquid sprays. Moreover, the magnetic sensor can see through oil, dust and dirt that disable ordinary optical absolute encoders. Optional coated circuit boards and GORE-TEX® weep/breather drain configurations are available for the roughest locations.

The HS6M features a broad range of industry standard communication protocols: from analog outputs to CANOpen, J1939, Profinet IO, Profibus and SSI, you will find the communication protocol you need.

Our HS6M encoders combine magnetic sensors and superior bearing and seal technology to give top performance in industrial applications. Select HS6M today!

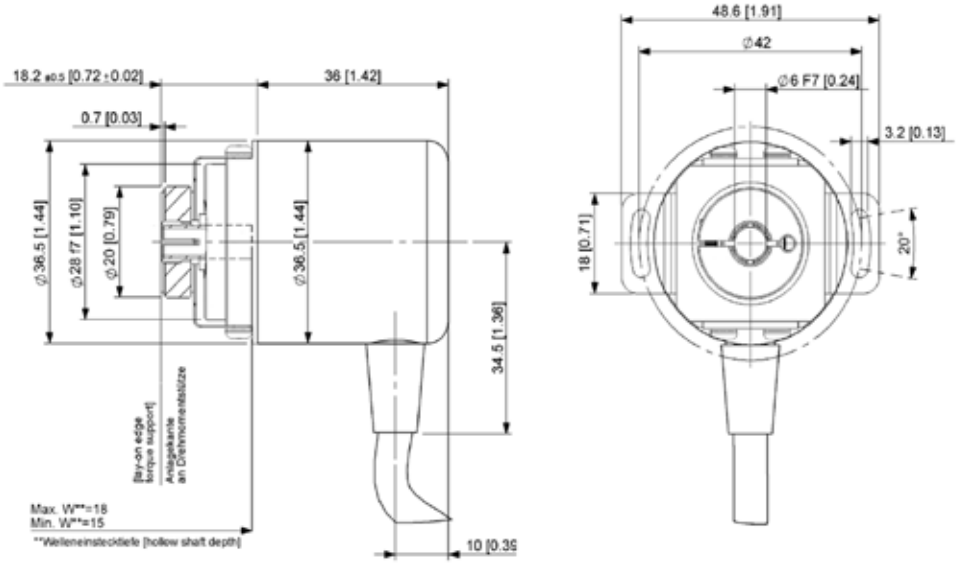

ERMEC
ERMEC, S.L. BARCELONA
C/ Francesc Teixidó, 22
08918 Badalona SPAIN
Tel. +34 902 450 160
info@ermec.com
www.ermec.com
ERMEC, S.L. - MADRID
C/ Puerto Rico, 4
28222 Majadahonda (Madrid) SPAIN
bilbao@ermec.com
portugal@ermec.com

HS6M SELECTION GUIDE

H	S	6	M											

MODEL	BUS	HOUSING	BORE SIZE	TURNS/BITS	PPR/BITS PER TURN	CONNECTOR	MOUNTING STYLE	OUTPUT	IP RATING	SPECIAL OPTIONS
HS6M	**A -** Analog **C -** CANOpen **J -** J1939 **N -** Profinet IO **P -** Profibus DP **S -** SSI	**1 -** 58mm **3 -** 36mm **7 -** 42mm **A -** 58mm w/ protective basket	**A -** 3/8” **B -** 1/2” **C -** 5/8” **D -** 1/4” **L -** 6mm **M -** 8mm **N -** 10mm **P -** 12mm **Q -** 14mm **R -** 15mm **Z -** All metric sizes (15mm native bore) **Y -** All US sizes (5/8” native bore)	**X -** 0/0 single turn **A -** 16/4 (analog) **2 -** 4096/12 **3 -** 8192/13 **4 -** 16384/14 **5 -** 32768/15 **6 -** 65536/16	**2 -** 4096/12* **3 -** 8192/13 **6 -** 65536/16 *use ‘2’ also for analog output	**A -** 1xM12/5 pin **C -** M12 x3 pin **E -** 1xM12/8 pin **F -** M23/12 pin **K -** 3x cable entry **W -** Cable, 1m	**A -** Radial (EOS only) **E -** Axial (EOS only)	**Digital** **1 -** Binary **2 -** Gray **Analog** **3 -** 0-5V **4 -** 0-10V **5 -** 4-20mA **6 -** 0-20mA **7 -** .5-4.5V **8 -** .5-9.5V	**X -** IP54, no shaft seal, aluminum + steel housing **A -** IP65 seals, aluminum +steel housing	**000 -** none **001 -** pushbutton setpoints **002 -** coated circuit brds Gore-TEX® weep drain for outdoor applications **9xx -** special cable length xx=length *0.3m

STANDARD CONNECTORS & OUTPUT FORMATS			
BUS	**CODE**	**CONNECTORS**	**OUTPUT**
ANALOG	A	A, W	3, 4, 5, 6
CANOPEN	C	A, E, W	1
J1939	J	A, W	1
PROFINET IO	N	C	1
SSI	S	E, F, W	1, 2

ERMEC
ERMEC, S.L. BARCELONA
C/ Francesc Teixidó, 22
08918 Badalona SPAIN
Tel. +34 902 450 160
info@ermec.com
www.ermec.com
ERMEC, S.L. - MADRID
C/ Puerto Rico, 4
28222 Majadahonda (Madrid) SPAIN
bilbao@ermec.com
portugal@ermec.com

HS40 Encoder -Absolute - Magnetic - Hollow Shaft - Severe Mill Duty

SPECIFICATIONS

Operating Power:
- **SSI:** 5-30 VDC; 30 mA @ 24 VDC, 125 mA @ 5 VDC
- **Analog V Out:** 12-30 VDC; 15 mA @ 24 V
- **Analog I Out:** 15-30 VDC; 40 mA @ 24 V

Output Format: Analog, SSI, CANOpen, J1939, Profibus
Accuracy: +/-0.35° (+/-21 arc-min)
Temperature: -30°C to +85°C
Environmental: IP65
Vibration: 10-1000 Hz, 10 G
Shock: 200 G, 3 mSec
Weight: 4.8 lb [2200 g]
Certifications: CE

HS40 hollow shaft severe duty magnetic absolute rotary encoders offer unequaled durability. HS40 features massive bearings and the best shaft sealing system in the industry to keep your process running, through temperature cycling and liquid sprays. Moreover, the magnetic sensor can see through oil, dust and dirt that disable ordinary optical absolute encoders. Also available: solid shaft model (AV30), absolute+incremental combo units (AV45, HS45), as well as optical models (AV6A, HS6A) for ultra-precision applications.

By utilizing Wiegand wire energy harvesting technology combined with magnetic sensors, Avtron has created an absolute encoder design which requires no batteries, long-term capacitors, glass disks, or gears!

Unlike other absolute encoders, HS40 allows a full size shaft fit; this allows it to easily fit on both NEMA and IEC frame motors with no special modification needed. Isolation from shaft currents is standard, and the interchangable bore sizing inserts allow easy modification.

The HS40 features a broad range of industry standard communication protocols: from analog outputs to CANOpen, Profibus, J1939 and SSI, you will find the communication protocol you need.

Get the absolutely best hollow shaft encoder available for your positioning application--pick HS40!

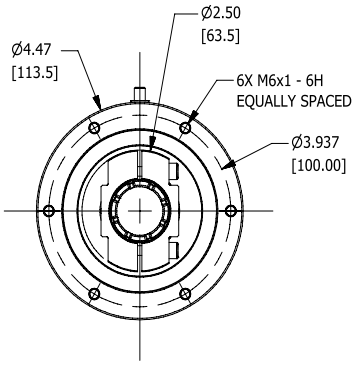

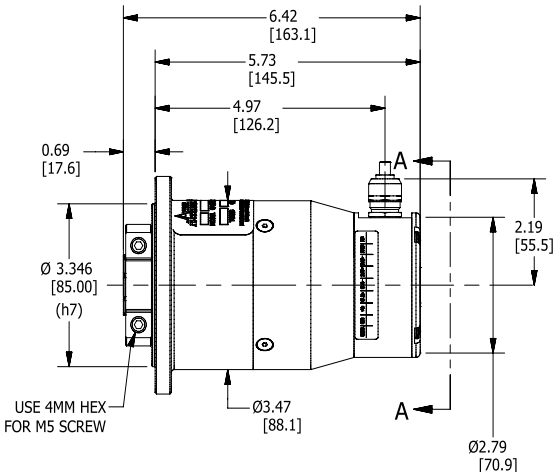

ERMEC
ERMEC, S.L. BARCELONA
C/ Francesc Teixidó, 22
08918 Badalona SPAIN
Tel. +34 902 450 160
info@ermec.com
www.ermec.com
ERMEC, S.L. - MADRID
C/ Puerto Rico, 4
28222 Majadahonda (Madrid) SPAIN
bilbao@ermec.com
portugal@ermec.com

HS40 SELECTION GUIDE

H	S	4	0											

MODEL	BUS	HOUSING	SHAFT BORE	TURNS/BITS	PPR/BITS	CONNECTOR	MOUNTING STYLE	CODING	TETHERS	SPECIAL OPTIONS
HS40	**A -** Analog **C -** CANOpen **J -** SAE J1939 **P -** Profibus DP **S -** SSI	**X -** Standard **1 -** Aluminum housig w/ Steel-IT® stainless paint	**C -** 5/8” **D -** 3/4” **E -** 7/8” **F -** 1” **G -** 1 1/8” **U -** All USA sizes “C, D, E, F, G” **S -** 16mm **V -** 19mm **W -** 20mm **Y -** 25mm **3 -** 30mm **Z -** All Metric sizes “S, V, W, Y, 3”	**X -** 0/0 Single turn **A -** 16/4 (analog) **2 -** 4096/12 **3 -** 8192/13 **4 -** 16,384/14 **5 -** 32768/15	**2 -** 4096/12 **3 -** 8192/13	**C -** 8192/13 **E -** M12/8 pin **F -** M23/12 pin **K -** 3x cable entry **W -** Cable, 1m **S -** Single cable entry	**E -** EOS only	**Digital** **1 -** Binary **2 -** Gray **Analog** **3 -** 0-5V **4 -** 0-10V **5 -** 4-20mA **6 -** 0-20mA **7 -** 0.5-4.5V **8 -** 0.5-9.5V	**X -** No Tether **E -** 4.5” NEMA C-Face tether **F -** 8.5” NEMA C-Face tether **G -** Threaded rod arm kit, adjustable 70-500mm (4.25”-12”) **H -** Fan cover T-bolt and 8.5” NEMA C-face tethers **M -** Fan cover T-bolt and 4.5”/6.75” NEMA C-face tethers **P -** Threaded rod arm kit, fixed 70mm length **T -** Threaded rod arm kit, adjustable 70-500mm w/T-bolt for fan cover **U -** Universal Tether/Arm Kit (includes all)	**000 -** none **9xx -** special cable length xx-feet [0.3m]

ERMEC
ERMEC, S.L. BARCELONA
C/ Francesc Teixidó, 22
08918 Badalona SPAIN
Tel. +34 902 450 160
info@ermec.com
www.ermec.com
ERMEC, S.L. - MADRID
C/ Puerto Rico, 4
28222 Majadahonda (Madrid) SPAIN
bilbao@ermec.com
portugal@ermec.com

AV6A ENCODER -Absolute - Optical - Shafted - Light Mill Duty

SPECIFICATIONS

Operating Power:
Volts: 10 - 30 VDC **Current:** 230 mA at 10 V, 100 mA at 24 V maximum*
Output Formats: Ethernet/IP*, Modbus TCP*, Profinet*, Powerlink, Profibus, CANOpen, DeviceNet, SSI, Parallel
Accuracy: +/-0.02° (+/-1 arc-min)
Shaft Loading: axial 9 lb [40 N], radial 25 lb [110 N]
Temperature: -40°C to 85°C
Environment: IP66
Vibration: 10G, 10-1000Hz
Shock: 30 G, 11 mS duration
Weight: 1.21 lb [550 g]; stainless option 2.7 lb [1200 g]
Warranty: 2 Year No-Hassle
*(Ethernet versions require 400 mA @ 10 V or 160 mA @ 24 V)

AV6A absolute rotary encoders fit industry standard 58mm flanges, yet are superior to ordinary absolute encoders. Also available: HS6A hollow shaft models, AV6M magnetic absolute encoders, AV30 severe-duty absolute magnetic encoders with 58mm, 2.5”, and 85mm flange mounting.

AV6A encoders have superior shaft seals and bearings that stay sealed to keep contaminants out, despite temperature cycles or liquid sprays. Our encoder seals are protected by mechanical barriers to prevent flexing or failure. The superior bearings of Avtron Encoders permit permit much larger side and axial loads.

Many competitive optical encoder designs risk sensor damage from any vibration or shock. Competitive designs even use thin glass disks in “industrial” products! We use only unbreakable disks in Avtron Encoders.

The AV6A offers a broad range of communication options, from parallel output and SSI to the latest Profibus and Ethernet standards.

Our optical AV6A encoders use superior sensor, disk, bearing, and seal technology to give top performance in industrial conditions. Select an AV6A Avtron Encoder today!

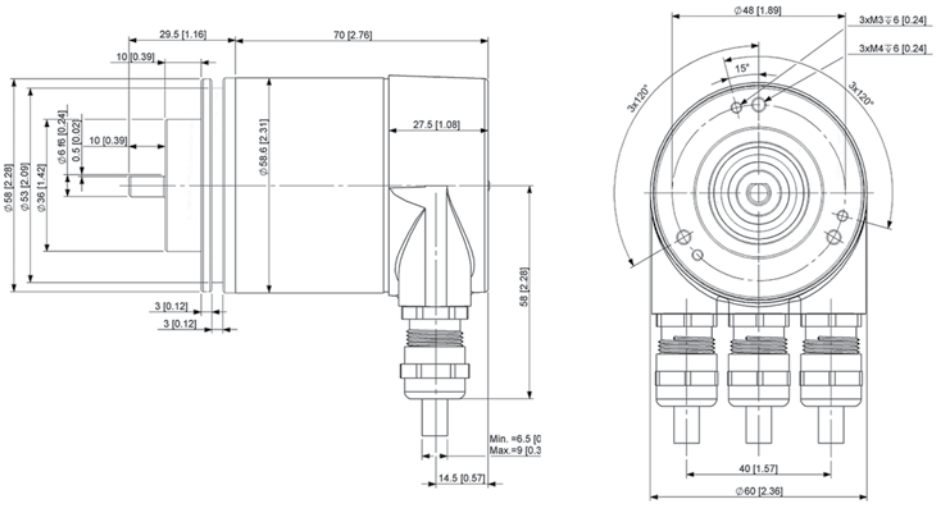

ERMEC
ERMEC, S.L. BARCELONA
C/ Francesc Teixidó, 22
08918 Badalona SPAIN
Tel. +34 902 450 160
info@ermec.com
www.ermec.com
ERMEC, S.L. - MADRID
C/ Puerto Rico, 4
28222 Majadahonda (Madrid) SPAIN
bilbao@ermec.com
portugal@ermec.com

AV6A SELECTION GUIDE

A	V	6	A											

MODEL	BUS	FLANGE	SHAFT SIZE	TURNS/BITS	PPR/BITS PER TURN	CONNECTOR	CONNECTOR EXIT	OUTPUT	IP RATING	SPECIAL OPTIONS
AV6A	**C -** CANOpen **D -** DeviceNet **K -** POWERLINK **L -** Parallel **M -** ModbusTCP Ethernet **N -** Profinet IO **P -** Profibus DP **R -** Ethernet/IP **S -** SSI	**1 -** 58mm "servo/clamp" flange, 36mm male pilot, 3X M3, X M4 at 48mm **2 -** 58mm "synchro" flange, 50mm male pilot, 3X M4 at 42mm **4 -** 2.5" square flange w/1.25" male pilot	**B -** 3/8" dia. x 5/8" w/flat **C -** 10mm dia. x 20mm w/flat **T -** 6mm dia., x 10mm, no flat **V -** 6mm dia., x 10mm, w/ flat	**X -** 0/0-single turn **A -** 16/4** **D -** 128/7** **E -** 256/8** **2 -** 4096/12 **4 -** 16384/14	**E -** 256/8** **F -** 512/9** **0 -** 1024/10** **2 -** 4096/12 **3 -** 8192/13 **4 -** 16384/14 **6 -** 65536/16	**A -** 1xM12/5 pin **B -** 2xM12/5 pin **C -** 3xM12 **D -** 2xM12/4/5 pin **E -** M12/8 pin **F -** M23/12 pin **G -** M27/26 pin **H -** RJ45, 1m **J -** 2x cable entry **K -** 3x cable entry **L -** 10 pin MS **M -** M23/8 pin Hengstler **N -** M23/8 pin Stegmann **Q -** M23/8 pin Kubler **R -** M23/16 pin **W -** Cable, 1m	**A -** side/radial **E -** end/axial	**1 -** Binary **2 -** Gray	**X -** None, IP54+ **A -** IP66 shaft seals **S -** IP66 seals, stainless housing	**000 -** none **9xx -** special cable length xx=length *0.3m
			Parallel Bus Only							

STANDARD CONNECTORS & OUTPUT FORMATS			
Bus	**Code**	**Connectors**	**Output**
CANOpen	C	A, B, C, J, K, W	1
DeviceNet	D	A, B, C, J, K, W	1
POWERLINK	K	D	1
Parallel	L	G, W, R	1, 2
ModbusTCP	M	D	1
Profinet	N	C	1
Profibus DP	P	C, K	1
Ethernet/IP	R	C	1
SSI	S	E, F, Q, R, S, W	1, 2

FLANGE COMPATIBILITY		
Flange	**Shaft**	**IP/Sealing**
1	T, C,B, V	X*, A, S
2	C, T, V	X*, A, S
4	B, C	X*, A, S

* no seal option not recommended

ERMEC
ERMEC, S.L. BARCELONA
C/ Francesc Teixidó, 22
08918 Badalona SPAIN
Tel. +34 902 450 160
info@ermec.com
www.ermec.com
ERMEC, S.L. - MADRID
C/ Puerto Rico, 4
28222 Majadahonda (Madrid) SPAIN
bilbao@ermec.com
portugal@ermec.com

AV6M ENCODER -Absolute - Magnetic - Shafted - Light Mill Duty

SPECIFICATIONS

Operating Power:

- **WWSSI:** 5-30 VDC; 30 mA @ 24 VDC, 125 mA @ 5 VDC
- **Analog V Out:** 12-30 VDC; 15 mA @ 24 V
- **Analog I Out:** 15-30 VDC; 40 mA @ 24 V

Output Format: Analog, CANOpen, J1939, SSI, Profibus, Profinet IO
Accuracy: +/-0.09° (+/-5 arc-min)
Temperature: -40°C to 85°C* (Std -30°C to +85°C)
Environmental: IP69K* (Std IP65)
Shaft Load: 180 N axial, 180 N radial* (std. 40 N axial, 110 N radial)
Vibration: 5-2000 Hz, 30 G*; (Std 10 G)
Shock: 300 G, 6 mSec* (Std 200 G, 3 mSec)
Weight: 0.33-0.40 lb [150-180 g]
Certifications: CE
Warranty: 2 Year No-Hassle
*Extended temp. range, shaft load capability, shock and vibration rating require 30mm flange style "6"

AV6M shafted magnetic absolute rotary encoders offer excellent performance and durability in a cost-effective package. By utilizing Wiegand wire energy harvesting technology combined with magnetic sensors, We have created an absolute encoder design which requires no batteries, long-term capacitors, glass disks, or gears! Also available: hollow shaft model (HS6M), severe duty models (AV30, HS40), as well as optical models (AV6A, HS6A) for ultra-precision applications.

AV6M encoders have superior shaft seals and bearings that stay sealed to keep contaminants out, through temperature cycling and liquid sprays. Moreover, the magnetic sensor can see through oil, dust and dirt that disable ordinary optical absolute encoders.

The AV6M features a broad range of industry standard communication protocols: from analog outputs to CANOpen, J1939, Profinet, Profib and SSI, you will find the communication protocol you need.

Our AV6M encoders combine magnetic sensors and superior bearing and seal technology to give top performance in industrial applications. Select an AV6M Avtron Encoder today!

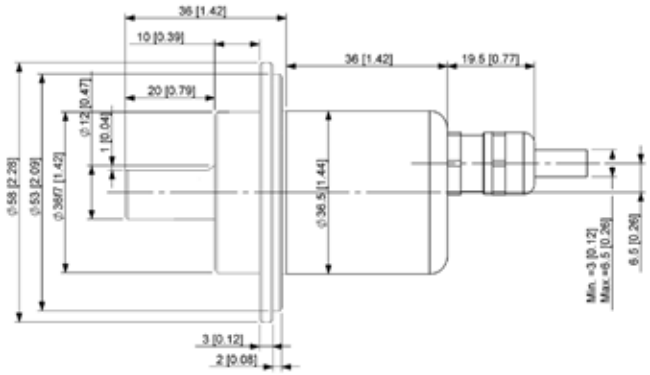

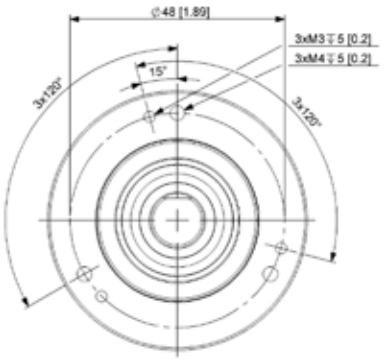

ERMEC
ERMEC, S.L. BARCELONA
C/ Francesc Teixidó, 22
08918 Badalona SPAIN
Tel. +34 902 450 160
info@ermec.com
www.ermec.com
ERMEC, S.L. - MADRID
C/ Puerto Rico, 4
28222 Majadahonda (Madrid) SPAIN
bilbao@ermec.com
portugal@ermec.com

AV6M SELECTION GUIDE

A	V	6	M											

MODEL	BUS	FLANGE	SHAFT SIZE	TURNS/BITS	PPR/BITS PER TURN	CONNECTOR	CONNECTOR EXIT	OUTPUT	IP RATING	SPECIAL OPTIONS
AV6M	**A -** Analog **C -** CANOpen **F -** CANSafe **J -** J1939 **N -** Profinet IO **P -** Profibus Dp **S -** SSI	**1 -** 58mm "servo/ clamp" flange, 36mm male pilot, 3X M3, 3X M4 at 42mm **2 -** 58mm "synchro" flange, 50mm male pilot, 3X M3, 3X M4 at 42mm **3 -** 36.5mm mini-flange w/33mm male pilot, 4X M3 at 26mm BC **4 -** 2.5" square flange w/1.25" male pilot **6 -** 36.5mm HD flange w/30mm male pilot, 4X M4 at 24mm **7 -** 42mm HD flange w/pilot, 4X M4 at 35mm	**B -** 3/8" dia. x 5/8" w/flat **C -** 10mm dia. x 20mm w/flat **R -** 10mm dia. x 20mm w/o flat **T -** 6mm dia., x 10mm, no flat	**X -** 0/0- single turn **A -** 16/4 (analog) **2 -** 4096/12 **3 -** 8192/13 **4 -** 32768/15	**2 -** 4096/12* **3 -** 8192/13 **6 -** 65536/16 *use '2' also for analog output	**A -** 1xM12/5 pin **C -** 3xM12 **E -** 1xM12/8 pin **F -** M23/12 pin **K -** 3x cable entry **W -** Cable, 1m	**A -** side/radial **E -** end/axial	**Digital** **1 -** Binary **2 -** Gray **Analog** **3 -** V output 0-5V **4 -** V output 0-10V **5 -** I Output 4-20mA **6 -** I Output 0-20mA	**X -** no shaft seal, IP54, aluminum + steel housing **A -** IP66 seals, aluminum + steel housing **K -** IP69K stainless housing	**000 -** none **9xx -** special cable length xx=length *0.3m **001 -** push button setpoints

STANDARD CONNECTORS & OUTPUT FORMATS				
Bus	**Code**	**Connectors**	**Exits**	**Output**
Analog	A	A, W	A, E	3, 4, 5, 6
CANOpen	C	A, W	A, E	1
J1939	J	A, W	A, E	1
SSI	S	E, F, W	A, E	1, 2

FLANGE COMPATIBILITY		
Flange	**Shaft**	**IP/Sealing**
1	C	X, A
2	C, T	X, A
3	C, T	X, A
4	B	X, A
6	R	A

ERMEC
ERMEC, S.L. BARCELONA
C/ Francesc Teixidó, 22
08918 Badalona SPAIN
Tel. +34 902 450 160
info@ermec.com
www.ermec.com
ERMEC, S.L. - MADRID
C/ Puerto Rico, 4
28222 Majadahonda (Madrid) SPAIN
bilbao@ermec.com
portugal@ermec.com

AV30 ENCODER -Absolute - Magnetic - Shafted - Severe Mill Duty

SPECIFICATIONS

Operating Power:
- **SSI:** 5-30 VDC; 30 mA @ 24 VDC, 125 mA @ 5 VDC
- **Analog V Out:** 12-30 VDC; 15 mA @ 24 V
- **Analog I Out:** 15-30 VDC; 40 mA @ 24 V

Output Format: Analog, SSI, CANOpen, J1939, Profibus
Accuracy: +/-0.35° (+/-21 arc-min)
Temperature: -30°C to +85°C
Environmental: IP65
Shaft Load: 180 N axial, 180 N radial
Vibration: 5-2000 Hz, 30 G
Shock: 300 G, 6 mSec
Weight: 3 lb [1350 g]
Certifications: CE
Warranty: 3 Year No-Hassle

AV30 shafted magnetic absolute rotary encoders offer a completely new level of durability, never seen before in absolute encoders. Yet the AV30 encoder will fit existing flanges and mounts, enabling easy upgrades from low durability encoders. Also available: hollow shaft model (HS40), absolute+incremental combo units as well as optical models (AV6A, HS6A) for ultra-precision applications.

The AV30 features massive bearings with over 10X the load rating of the competition. Industry-leading seal systems stay sealed to keep contaminants out through temperature cycling and liquid sprays. Moreover, the magnetic sensor is not fazed by oil, dust and dirt that disable ordinary optical absolute encoders.

By utilizing Wiegand wire energy harvesting technology, combined with magnetic sensors, we have created an absolute encoder design which requires no batteries, super capacitors, glass disks, or gears!

The AV30 features a broad range of industry standard communication protocols: from analog outputs to CANbus, Profibus, J1939 and SSI, you will find the communication protocol you need.

Stop suffering costly downtime due to absolute encoder failures--upgrade to AV30 today!

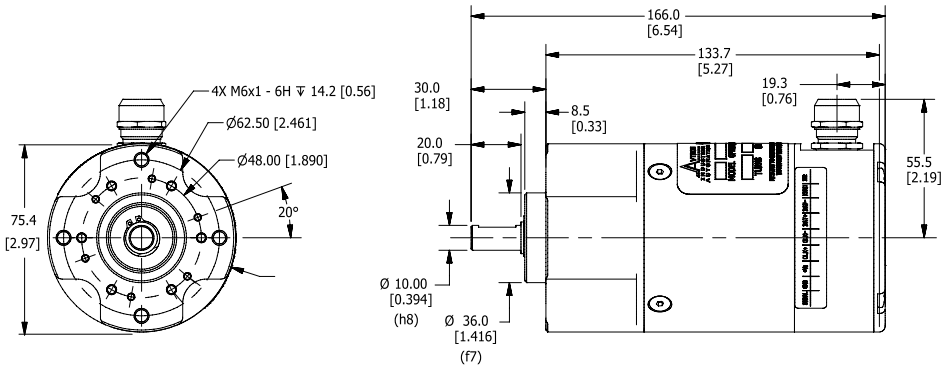

ERMEC
ERMEC, S.L. BARCELONA
C/ Francesc Teixidó, 22
08918 Badalona SPAIN
Tel. +34 902 450 160
info@ermec.com
www.ermec.com
ERMEC, S.L. - MADRID
C/ Puerto Rico, 4
28222 Majadahonda (Madrid) SPAIN
bilbao@ermec.com
portugal@ermec.com

AV30 SELECTION GUIDE

A	V	3	0	☐	☐	☐	☐	☐	☐	☐	☐	☐	☐☐☐
MODEL	**BUS SIZE**	**FLANGE**	**SHAFT SIZE**	**TURNS/BITS**	**PPR/BITS**	**CONNECTOR**	**CONNECTOR EXIT**	**CODING**	**ADD'L DRILL PATTERN**	**SPECIAL OPTIONS**			
AV30	**A -** Analog **C -** CANOpen **J -** SAE J1939 CAN **P -** Profibus DP **S -** SSI	**1 -** 75.4mm flange, 36mm male pilot, 3X M3, 3X M4 @ 48mm BC, No Servo Clamp **2 -** 75.4mm flange, 50mm male pilot, 6X M4, @ 42mm BC, No Servo Clamp **3 -** 78mm Flange, 2.5" Male Pilot **4 -** 2.65" Square flange, 1.25 Male Pilot" **5 -** 85mm (B10) Pilot 6X M6 @ 100mm **6 -** Nema 56 4.5" Male Pilot	**B -** 3/8" solid shaft w/flat **C -** 10mm solid shaft w/flat **H -** 11mm dia. shaft **T -** 6mm solid shaft no flat **V -** 1/4"	**X -** 0/0 single turn **A -** 16/4 (analog) **2 -** 4096/12 **3 -** 8192/13 **4 -** 16384/14 **5 -** 32768/15	**2 -** 4096/12 **3 -** 8192/13	**C -** 3xM12 4/5/5 pin **E -** M12/8 pin **F -** M23/12 pin **K -** 3x cable entry **W -** Cable, 1m **S -** Single cable entry	**A -** side/radial	**Digital** **1 -** Binary **2 -** Gray **Analog** **3 -** 0-5V **4 -** 0-10V **5 -** 4-20mA **6 -** 0-20mA **7 -** .5 to 4.5vDC **8 -** .5 to 9.5vDC	**X -** No Additional Face Drill Holes	**000 -** None **9xx -** Special cable length (xx-feet [0.3m])		

ERMEC
ERMEC, S.L. BARCELONA
C/ Francesc Teixidó, 22
08918 Badalona SPAIN
Tel. +34 902 450 160
info@ermec.com
www.ermec.com
ERMEC, S.L. - MADRID
C/ Puerto Rico, 4
28222 Majadahonda (Madrid) SPAIN
bilbao@ermec.com
portugal@ermec.com

XR45 SMARTSAFE™ ENCODER -Incremental - Magnetic - Hollow Shaft - Hazardous Duty

Certifications:

- ATEX/IECEx Zone 1 & 21 Group IIC
- cULus Class I Div I and Zone 0 Group A,B,C,D
- ATEX/IECEx Zone 2 & 22 Group IIC
- cULus Class I Div. 2 Groups A,B,C,D

SPECIFICATIONS

Operating Power: (add load and cable drive current as req'd)
Division 1, Zone 1 (XRB3): 12-24VDC In/Out, Nom. 200 mA
Division 2, Zone 2: 5-24VDC In/Out, 150mA
Output Format: A Quad B with marker (A, /A, B, /B, Z, /Z)
Frequency Range: 0 to 165 KHz
Maximum Cable Length:
Division 1, Zone 1: Encoder 500' Isolator 1000'
Division 2, Zone 2 (5 to 12 VDC in): 500'
Division 2, Zone 2 (15 to 24 VDC in): 250'
Temperature: -40°C to 80°C (storage -40°C to 100°C)
Environmental: IP54 (see manual for details)
Vibration: 5-2000 Hz, 20 G, 100 G Shock
Weight: 10-12 lb [4.5-5.5 kg]
See installation drawings for Warnings and Limitations

XR45 hollow shaft encoders are a unique industry first. By combining Avtron durable magnetic encoder technology with SMARTSafe™ systems, Avtron has created a truly durable hollow shaft encoder which can be used in hazardous environments and applications. It is ATEX, IECEx and cULus approved. SMARTSafe encoders can be used in gas and ATEX dust hazardous environments. Also available: shafted models (XR4F, XR485), and no-bearing modular encoders (XR56, XR85, XR115, XR125, XR850).

For applications requiring ATEX/IECEx Zone 2 or 22 or UL Class I, Division 2, Groups A,B,C,D use the XR45 directly in your application, with no barrier, isolator or cable gland required.

For applications requiring ATEX/IECEx Zone 1 or 21 add the XRB3 isolator; XRB3 isolator systems enable use in Class I, Div 1 and Class I, Zone 0 applications. This permits the use of intrinsically safe wiring instead of explosion proof conduit or glands.

Unlike the competition, the Avtron SMARTSafe encoder systems are protected against short circuits, power-to-output wiring, and output-to-ground faults.

Instead of relying on a tiny optical encoder with weak bearings install the most rugged encoders available for your drilling or industrial applications. Vibration, shock, liquids, dust and dirt won't harm SMARTSafe encoders! Paint booths, draw works, coil tubing rigs...XR45 can keep them all working 24/7/365.

Select the Avtron XR45 SMARTSafe™ encoder to eliminate encoder problems in your hazardous duty application!

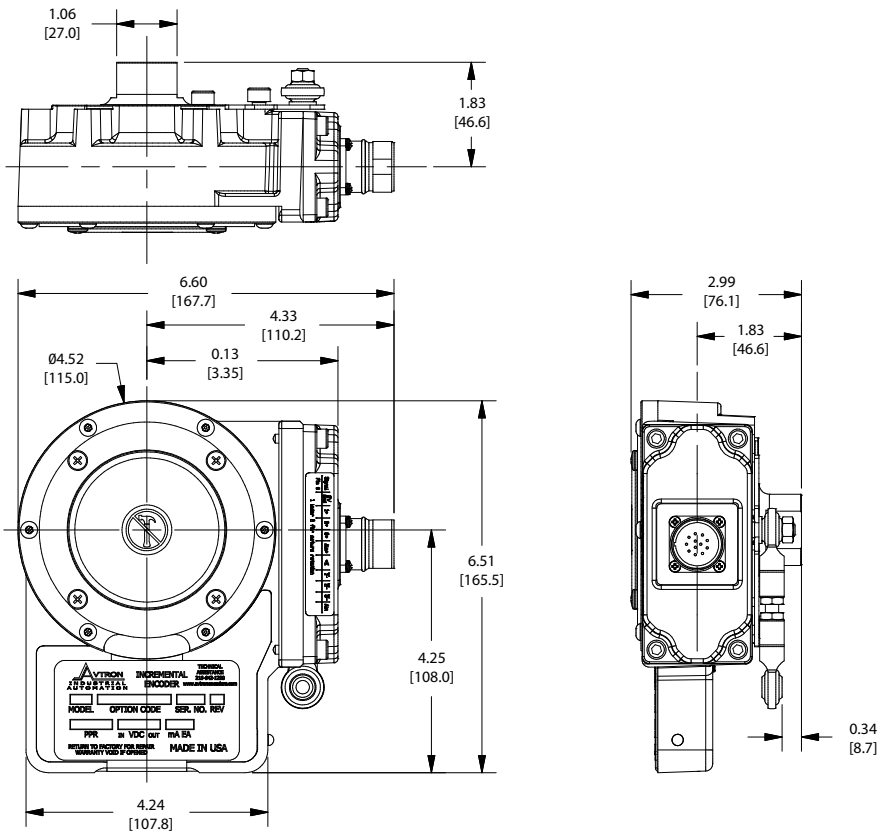

ERMEC
ERMEC, S.L. BARCELONA
C/ Francesc Teixidó, 22
08918 Badalona SPAIN
Tel. +34 902 450 160
info@ermec.com
www.ermec.com
ERMEC, S.L. - MADRID
C/ Puerto Rico, 4
28222 Majadahonda (Madrid) SPAIN
bilbao@ermec.com
portugal@ermec.com

XR45 SELECTION GUIDE

X	R	4	5															

MODEL	BORE SIZE	LEFT OUTPUT PPR	RIGHT OUTPUT PPR	LINE DRIVER	CONNECTOR OPTIONS	TETHER	CHANNELS	SPECIAL OPTIONS
XR45	**Clamping Collar Mount U.S.** **C -** 5/8” **D -** 3/4” **E -** 7/8” **F -** 1” **G -** 1 1/8’ **K -** 1 3/8’ **U -** All US Sizes **Clamping Collar Mount Metric** **S -** 16mm **T -** 18mm **V -** 19mm **W -** 20mm **Y -** 25mm **3 -** 30mm **Z -** All Metric Sizes **End of Shaft: Center Bolt Mount** **L -** 16mm (no taper) **M -** 17mm (10:1 taper)	**XX -** None **A0 -** Special **AF -** 60 **AK -** 80 **AG -** 100 **AH -** 120 **AA -** 128 **AL -** 240 **AN -** 256 **AP -** 300 **AE -** 360 **AC -** 400 **AB -** 480 **AQ -** 500 **AR -** 512 **AS -** 600 **AV -** 900 **AJ -** 960 **AW -** 1000 **AY -** 1024 **AZ -** 1200 **CX -** 1500 **A4 -** 2048 **A5 -** 2500 **AT -** 3072 **AV -** 3600 **AD -** 4096 **A8 -** 4800 **A9 -** 5000	**XX -** None **A0 -** Special **AF -** 60 **AK -** 80 **AG -** 100 **AH -** 120 **AA -** 128 **AL -** 240 **AN -** 256 **AP -** 300 **AE -** 360 **AC -** 400 **AB -** 480 **AQ -** 500 **AR -** 512 **AS -** 600 **AV -** 900 **AJ -** 960 **AW -** 1000 **AY -** 1024 **AZ -** 1200 **CX -** 1500 **A4 -** 2048 **A5 -** 2500 **AT -** 3072 **AV -** 3600 **AD -** 4096 **A8 -** 4800 **A9 -** 5000	See Table Below	See Table Below	**X -** None Flat Styles: **A -** Fan Cover - 1/4” Mounting **D -** Fan Cover (T-bolt) **E -** 4.5” NEMA C-face **F -** 8.5” NEMA FC-face Threaded Rod Styles: **G -** 70-500mm w/bracket **P -** 70mm fixed w/screw **T -** Fan Cover 70-500mm w/T-bolt Combinations: **H -** Fan Cover & 8.5” C-face **M-** Fan Cover & 4.5” C-Face **U -** Universal (includes all styles)	**A -** A,/A, B,/B, Z,/Z (req’d for 8, 10 pin connectors) **B -** A,B,A,B (no marker) **E -** A,B,Z (single ended) **F -** A,B (single ended, no marker) **D -** A,A (Diff Phase)	**000 -** None **001 -** Ceramic Bearings **004 -** Super Magnetic Shielding **018 -** Add Isolator **4xx -** Special PPR **9xx -** Specify cable length xx=feet max 33ft (use w/ Option “Q”,“W”, “Z”)

	Description	ATE / IECEx Zone 1 & 21	ATEX / IECEx Zone 2 & 22	Class I & II Div. 1 & Zone 0	Class I & II Div. 2 Listed	Class I & II Div. 2 Recognized
	Voltage In / Out	5-7 / 5	5-24 / 5-24	5-7 / 5	5-24 / 5-24	5-24 / 5-24
	Line Driver Code	H	7	F	G	R
Code	**Required Isolator**	**XRB3**	**None**	**XRB3**	**None**	**None**
A	10 Pin MS W/O Plug - Std Phasing	✓	✓	✓		✓
B	10 Pin MS W/O Plug - Dynapar Phasing	✓	✓	✓		✓
C	10 Pin MS W/Plug - Std Phasing	✓	✓	✓		✓
D	10 Pin MS W/Plug - Dynapar Phasing	✓	✓	✓		✓
4	10 Pin MS W/Plug - Large Encoder Pinout	✓	✓	✓		✓
E	6 Pin MS W/Plug - Std. Pinout	✓	✓	✓		
F	6 Pin MS W/Plug - Dynapar Pinout	✓	✓	✓		
J	7 Pin MS W/Plug - Std. Pinout	✓	✓	✓		✓
K	7 Pin MS W/Plug - Dynapar Pinout	✓	✓	✓		✓
T	8 Pin M12, Global Pinout	✓	✓	✓		
U	8 Pin M12, US Pinout	✓	✓	✓		
2	12 Pin M23, Leine & Linde Pinout	✓	✓	✓		
3	12 Pin M23, Hubner Pinout	✓	✓	✓		
P	Small Industrial Style - Std. Pinout & Plug	✓	✓	✓		
G	Small Industrial Style - Northstar Pinout & Plug	✓	✓	✓		
R	10 Pin mini Twist Lock with Plug	✓	✓	✓		
W	Flexible Cable with Sealing Gland	✓	✓	✓		
H	Conduit Box, Terminal Block & 1/2" NPT	✓	✓	✓	✓	
L	Conduit Box, Terminal Block & 1/2” NPT + Cord	✓	✓	✓		
M	Conduit Box, Terminal Block, 3/4" NPT+Chord	✓	✓	✓	✓	
N	Conduit Box, Terminal Block & 1" NPT	✓	✓	✓	✓	
8	Conduit Box, Terminal Block & 25mm	✓	✓	✓	✓	

ERMEC
ERMEC, S.L. BARCELONA
C/ Francesc Teixidó, 22
08918 Badalona SPAIN
Tel. +34 902 450 160
info@ermec.com
www.ermec.com
ERMEC, S.L. - MADRID
C/ Puerto Rico, 4
28222 Majadahonda (Madrid) SPAIN
bilbao@ermec.com
portugal@ermec.com

XR56 SMARTSAFE™ ENCODER -Incremental - Magnetic - Hollow Shaft - Hazardous Duty

Certifications:

- ATEX/IECEx Zone 1 & 21 Group IIC
- cULus Class I Div 1 and Zone 0 Group A,B,C,D
- ATEX/IECEx Zone 2 & 22 Group IIC
- cULus Class I Div. 2 Groups A,B,C,D

SPECIFICATIONS

Operating Power: (add cable drive current as req'd)
Division 1, Zone 1 (XRB3): 12-24VDC In/Out, Nom. 200 mA
Division 2, Zone 2: 5-24VDC In/Out, 150mA
Output Format: A Quad B with marker (A, /A, B, /B, Z, /Z)
Frequency Range: 0 to 165 KHz
Maximum Cable Length:
Division 1, Zone 1: Encoder 500' Isolator 1000'
Division 2, Zone 2 (5 to 12 VDC in): 500'
Division 2, Zone 2 (15 to 24 VDC in): 250'
Temperature: -40°C to 80°C (storage -40°C to 100°C)
Environmental: IP54 (see manual for details)
Vibration: 5-2000 Hz, 20 G, 100 G Shock
Weight: 2-3 lb [.9-1.4 kg]
Warranty: 2 Year No-Hassle
See installation drawings for Warnings and Limitations

XR56 SMARTSafe™ 4.5" modular incremental quadrature rotary encoders are a breakthrough in hazardous duty encoders. They are ATEX and UL approved and offer incredibly reliable no-bearing construction! SMARTSafe™ encoders can be used in gas and ATEX dust hazardous environments. Also available: hollow shaft models (XR45, XR685), shafted models (XR4F, XR485), and no-bearing modular encoders to fit other flange sizes (XR85, XR115, XR125, XR850).

For applications requiring ATEX/IECEx Zone 2 or 22 or UL Class I, Division 2, (gas) Groups A,B,C,D use the XR56 directly in your application with no barrier, isolator or cable gland required.

For applications requiring UL Division 1, ATEX/IECEx Zone 1 or 21 protection use the XRB3 isolator in your control cabinet which permits the use of intrinsically safe wiring instead of explosion-proof conduit or glands. The XR56 can also be used in UL Class I Div 1 & Zone 0 applications using the XRB3 Isolator.

Unlike the competition, Avtron SMARTSafe™ encoder systems are protected against short circuits, power-to-output wiring, and output-to-ground faults.

Instead of relying on a tiny optical encoder with weak bearings, install the most rugged encoders available for your drilling or industrial applications. Vibration, shock, liquids, dust and dirt won't harm SMARTSafe™ encoders! Paint booths, draw works, coil tubing rigs...XR56 can keep them all working 24/7/365.

Eliminate the biggest cause of industrial encoder failure--eliminate the bearings with XR56 hazardous duty encoders.

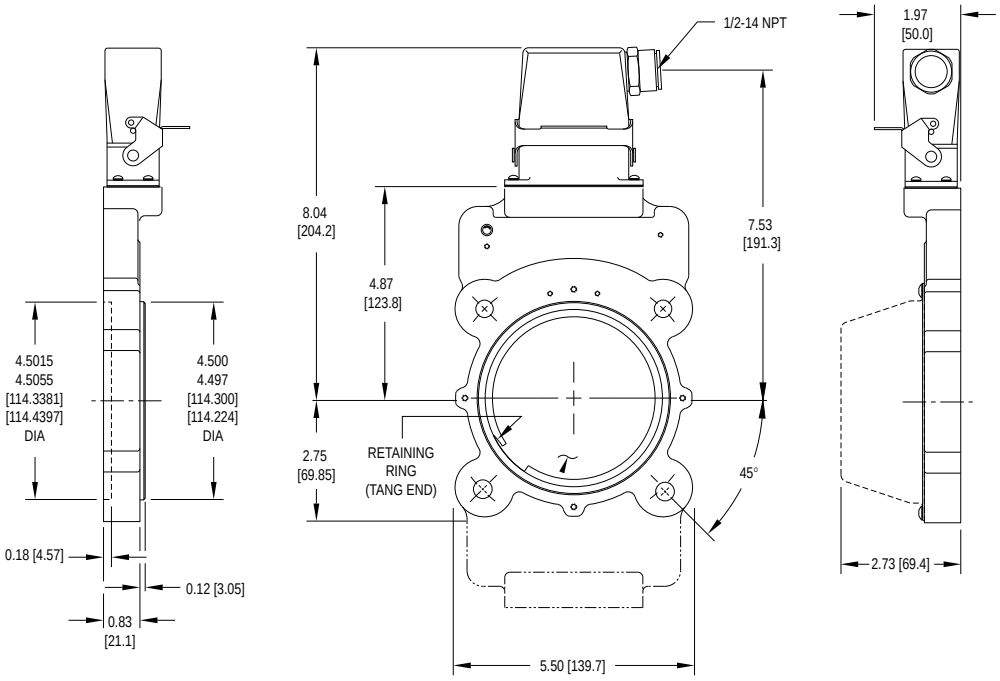

ERMEC
ERMEC, S.L. BARCELONA
C/ Francesc Teixidó, 22
08918 Badalona SPAIN
Tel. +34 902 450 160
info@ermec.com
www.ermec.com
ERMEC, S.L. - MADRID
C/ Puerto Rico, 4
28222 Majadahonda (Madrid) SPAIN
bilbao@ermec.com
portugal@ermec.com

XR56 SELECTION GUIDE

X	R	5	6												

MODEL	HOUSING TYPE	ROTOR CODE		COVER STYLE	LINE DRIVER	LEFT OUTPUT PPR	RIGHT OUTPUT PPR	CONNECTOR	SPECIAL OPTIONS
		US	Metric						
XR56	**1 -** Single Output **2 -** Double Output	**CA -** 0.500 **CB -** 0.625 **CC -** 0.875 **CD -** 0.938 **CE -** 1.000 **CF -** 1.125 **C2 -** 1.188 **CG -** 1.250 **CH -** 1.375 **CT -** 1.500 **CJ -** 1.625 **CK -** 1.750 **CL -** 1.875 **CM -** 2.000 **CN -** 2.125 **CQ -** 2.250 **CP -** 2.375 **CR -** 2.500 **TS -** 2.625* **TW -** 2.750* **TU -** 2.875* **TV -** 3.000* **T4 -** 3.125* **T7 -** 3.188* **TZ -** 3.250*	**D2 -** 10mm **DA -** 11mm **D3 -** 12mm **DB -** 14mm **DC -** 15mm **DD -** 16mm **D4 -** 18mm **DE -** 19mm **DF -** 24mm **D5 -** 25mm **DG -** 28mm **DH -** 30mm **DT -** 32mm **DJ -** 36mm **DK -** 38mm **DL -** 42mm **DM -** 45mm **DN -** 48mm **DP -** 52mm **DR -** 55mm **DS -** 60mm **MU -** 65mm* **MV -** 70mm* **MW -** 75mm* **MY -** 80mm* **MZ -** 85mm*	**E -** Extended Shaft Cover **F -** Flat Cover **T -** Flat Thru-Hole Cover with Shaft Seal **X -** None	See Table Below	**0 -** Non-std. **F -** 60 **G -** 100 **H -** 120 **A -** 128 **L -** 240 **N -** 256 **P -** 300 **E -** 360 **B -** 480 **Q -** 500 **R -** 512 **S -** 600 **V -** 900 **J -** 960 **Y -** 1024 **Z -** 1200 **3 -** 2000 **4 -** 2048 **5 -** 2500 **D -** 4096 **8 -** 4800 **9 -** 5000	**0 -** Non-std. **F -** 60 **G -** 100 **H -** 120 **A -** 128 **L -** 240 **N -** 256 **P -** 300 **E -** 360 **B -** 480 **R -** 512 **S -** 600 **V -** 900 **J -** 960 **Y -** 1024 **Z -** 1200 **3 -** 2000 **4 -** 2048 **5 -** 2500 **D -** 4096 **8 -** 4800 **9 -** 5000 **0 -** Non-Std. **X -** None	See Table Below	**000 -** No Modification **005 -** Super Magnetic Shielding **4xx -** Special PPR Code, consult factory **9xx -** Special Cable Length, xx=length in feet **018 -** Includes Isolator

* Set Screw Rotor only

	Description	ATE / IECEx Zone 1 & 21	ATEX / IECEx Zone 2 & 22	Class I & II Div. 1 & Zone 0	Class I & II Div. 2 Listed	Class I & II Div. 2 Recognized
	Voltage In / Out	5-7 / 5	5-24 / 5-24	5-7 / 5	5-24 / 5-24	5-24 / 5-24
	Line Driver Code	H	7	F	G	R
Code	**Required Isolator**	**XRB3**	**None**	**XRB3**	**None**	**None**
A	10 Pin MS W/O Plug - Std Phasing	✓	✓	✓		✓
B	10 Pin MS W/O Plug - Dynapar Phasing	✓	✓	✓		✓
C	10 Pin MS W/Plug - Std Phasing	✓	✓	✓		✓
D	10 Pin MS W/Plug - Dynapar Phasing	✓	✓	✓		✓
E	7 Pin MS W/Plug A-quad-B - Std. Phasing	✓	✓	✓		✓
F	7 Pin MS W/Plug A, A\ - Std. Phasing	✓	✓	✓		✓
J	7 Pin MS W/Plug A, B, Z - Std. Phasing	✓	✓	✓		✓
K	7 Pin MS W/Plug A, A\, B,B\ - Std. Phasing	✓	✓	✓		✓
S	7 Pin MS W/Plug A-quad-B - Dynapar Phasing	✓	✓	✓		✓
T	7 Pin MS W/Plug A, A\ - Dynapar Phasing	✓	✓	✓		✓
U	7 Pin MS W/Plug A, B, Z - Dynapar Phasing	✓	✓	✓		✓
V	7 Pin MS W/Plug A, A\, B,B\ - Dynapar Phasing	✓	✓	✓		✓
P	Small Industrial Style - Std. Pinout & Plug	✓	✓	✓		
G	Small Industrial Style - Northstar Pinout & Plug	✓	✓	✓		
R	10 Pin mini Twist Lock with Plug	✓	✓	✓		✓
W	Flexible Cable with Sealing Gland	✓	✓	✓		
Y	10 Pin MS with Plug on 12" cable	✓	✓	✓		
H	Conduit Box, Terminal Block & 1/2" NPT	✓	✓	✓	✓	
M	Conduit Box, Terminal Block, 3/4" NPT+Chord	✓	✓	✓	✓	
N	Conduit Box, Terminal Block & 1" NPT	✓	✓	✓	✓	
8	Conduit Box, Terminal Block & 25mm	✓	✓	✓	✓	

ERMEC
ERMEC, S.L. BARCELONA
C/ Francesc Teixidó, 22
08918 Badalona SPAIN
Tel. +34 902 450 160
info@ermec.com
www.ermec.com
ERMEC, S.L. - MADRID
C/ Puerto Rico, 4
28222 Majadahonda (Madrid) SPAIN
bilbao@ermec.com
portugal@ermec.com

XR85 SMARTSAFE™ ENCODER -Incremental - Magnetic - Hollow Shaft - Hazardous Duty

Certifications:

- ATEX/IECEx Zone 1 & 21 Group IIC
- cULus Class I Div 1 and Zone 0 Group A,B,C,D
- ATEX/IECEx Zone 2 & 22 Group IIC
- cULus Class I Div. 2 Groups A,B,C,D

SPECIFICATIONS

Operating Power: (add load and cable drive current as req'd)
Division 1, Zone 1 (XRB3): 12-24VDC In/Out, Nom. 200 mA
Division 2, Zone 2: 5-24VDC In/Out, 150mA
Output Format: A Quad B with marker (A, /A B, /B, Z, /Z)
Frequency Range: 0 to 165 KHz
Maximum Cable Length:
Division 1, Zone 1: Encoder 500' Isolator 1000'
Division 2, Zone 2 (5 to 12 VDC in): 500'
Division 2, Zone 2 (15 to 24 VDC in): 250'
Temperature: -40°C to 80°C (storage -40°C to 100°C)
Environmental: IP54 (see manual for details)
Vibration: 5-2000 Hz, 20 G, 100 G Shock
Weight: 2-3 lb [.9-1.4 kg]
Warranty: 2 Year No-Hassle
See installation drawings for Warnings and Limitations

XR85 SMARTSafe™ 8.5" modular rotary incremental quadrature encoders are a breakthrough in hazardous duty encoders. They are ATEX and UL approved and offer incredibly reliable no-bearing construction! SMARTSafe™ encoders can be used in gas and ATEX dust hazardous environments. Also available: hollow shaft models (XR45, XR685), shafted models (XR4F, XR485), and no-bearing modular encoders to fit other flange sizes (XR56, XR115, XR125, XR850).

For applications requiring ATEX/IECEx Zone 2 or 22 or UL Class I, Division 2, Groups A,B,C,D use the XR85 directly in your application, with no barrier, isolator or cable gland required.

For applications requiring UL Division 1, ATEX/IECEx Zone 1 or 21, protection use the XRB3 isolator in your control cabinet which permits the use of intrinsically safe wiring instead of explosion-proof conduit or glands. The XR85 can also be used in UL Class I Div 1 & Zone 0 applications using the XRB3 Isolator.

Unlike the competition, Avtron SMARTSafe™ encoder systems are protected against short circuits, power-to-output wiring, and output-to-ground faults.

Instead of relying on a tiny optical encoder with weak bearings, install the most rugged encoders available for your drilling or industrial applications. Vibration, shock, liquids, dust and dirt won't harm SMARTSafe™ encoders! Paint booths, draw works, coil tubing rigs...XR85 can keep them all working 24/7/365.

Eliminate the biggest cause of industrial encoder failure--eliminate the bearings with XR85 hazardous duty encoders

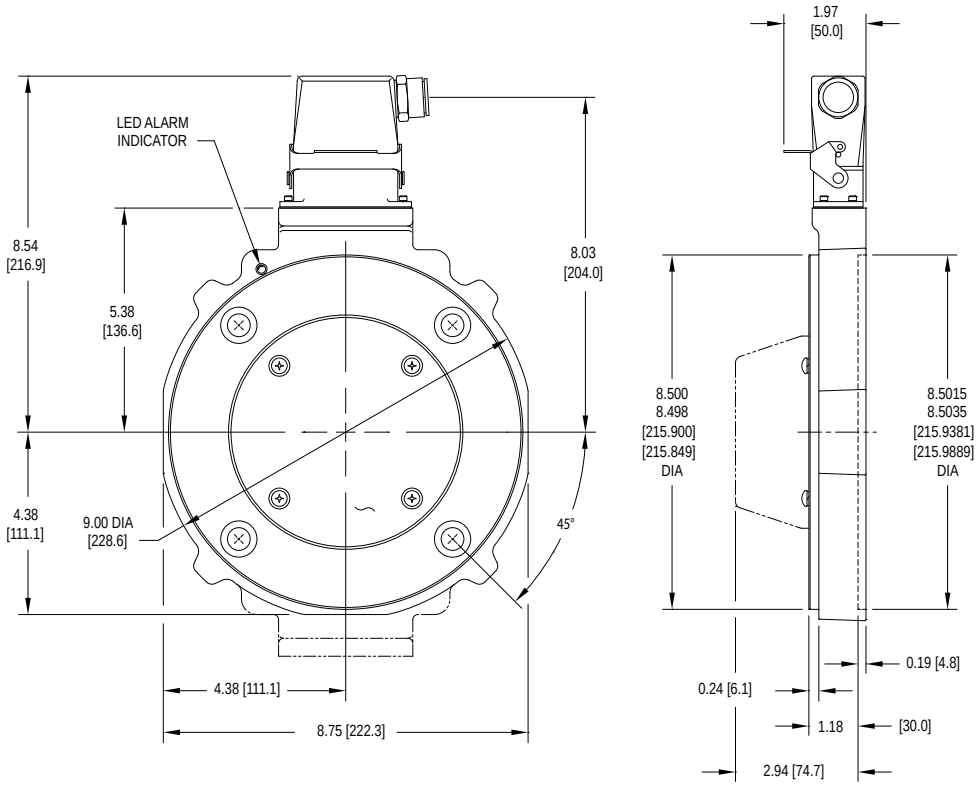

ERMEC
ERMEC, S.L. BARCELONA
C/ Francesc Teixidó, 22
08918 Badalona SPAIN
Tel. +34 902 450 160
info@ermec.com
www.ermec.com
ERMEC, S.L. - MADRID
C/ Puerto Rico, 4
28222 Majadahonda (Madrid) SPAIN
bilbao@ermec.com
portugal@ermec.com

XR85 SELECTION GUIDE

X	R	8	5	☐	☐☐	☐	☐	☐	☐	☐	☐☐☐

MODEL	HOUSING TYPE	ROTOR CODE		COVER STYLE	LINE DRIVER	LEFT OUTPUT PPR	RIGHT OUTPUT PPR	CONNECTOR	SPECIAL OPTIONS
		US	**Metric**						
XR85	**1 -** Single Output **2 -** Double Output	**CA -** 0.500 **CB -** 0.625 **CC -** 0.875 **CD -** 0.938 **CE -** 1.000 **CF -** 1.125 **C2 -** 1.188 **CG -** 1.250 **CH -** 1.375 **CT -** 1.500 **CJ -** 1.625 **CK -** 1.750 **CL -** 1.875 **CM -** 2.000 **CN -** 2.125 **CQ -** 2.250 **CP -** 2.375 **CR -** 2.500 **TS -** 2.625* **TU -** 2.875* **TV -** 3.000* **T4 -** 3.125* **T7 -** 3.188* **TZ -** 3.250*	**D2 -** 10mm **DA -** 11mm **D3 -** 12mm **DB -** 14mm **DC -** 15mm **DD -** 16mm **D4 -** 18mm **DE -** 19mm **DF -** 24mm **DG -** 28mm **DH -** 30mm **DT -** 32mm **DJ -** 36mm **DK -** 38mm **DL -** 42mm **DM -** 45mm **DN -** 48mm **DP -** 52mm **DR -** 55mm **DS -** 60mm **MU -** 65mm* **MV -** 70mm* **MW -** 75mm* **MY -** 80mm* **MZ -** 85mm*	**X -** None **E -** Extended Shaft Cover **F -** Flat Cover **T -** Flat Thru-Hole Cover with Shaft Seal	See Table Below	**F -** 60 **G -** 100 **H -** 120 **A -** 128 **L -** 240 **N -** 256 **P -** 300 **E -** 360 **B -** 480 **Q -** 500 **R -** 512 **S -** 600 **V -** 900 **J -** 960 **Y -** 1024 **Z -** 1200 **3 -** 2000 **4 -** 2048 **5 -** 2500 **D -** 4096 **8 -** 4800 **9 -** 5000 **0 -** Non-std.	**F -** 60 **G -** 100 **H -** 120 **A -** 128 **L -** 240 **N -** 256 **P -** 300 **E -** 360 **B -** 480 **Q -** 500 **R -** 512 **S -** 600 **V -** 900 **J -** 960 **Y -** 1024 **Z -** 1200 **3 -** 2000 **4 -** 2048 **5 -** 2500 **D -** 4096 **8 -** 4800 **9 -** 5000 **0 -** Non-std. **X -** None	See Table Below	**000 -** No Modification **004 -** Add Housing Drain **005 -** Super Magnetic Shielding **017 -** Counter bored mtg. holes **018 -** Includes Isolator **4xx -** Special PPR (see chart) **9xx -** Special Cable Length, xx=length in feet

* Set Screw Rotor only

	Description	ATE / IECEx Zone 1 & 21	ATEX / IECEx Zone 2 & 22	Class I & II Div. 1 & Zone 0	Class I & II Div. 2 Listed	Class I & II Div. 2 Recognized
	Voltage In / Out	5-7 / 5	5-24 / 5-24	5-7 / 5	5-24 / 5-24	5-24 / 5-24
	Line Driver Code	H	7	F	G	R
Code	**Required Isolator**	**XRB3**	**None**	**XRB3**	**None**	**None**
A	10 Pin MS W/O Plug - Std Phasing	✓	✓	✓		✓
B	10 Pin MS W/O Plug - Dynapar Phasing	✓	✓	✓		✓
C	10 Pin MS W/Plug - Std Phasing	✓	✓	✓		✓
D	10 Pin MS W/Plug - Dynapar Phasing	✓	✓	✓		✓
E	7 Pin MS W/Plug A-quad-B - Std. Phasing	✓	✓	✓		✓
F	7 Pin MS W/Plug A, A\ - Std. Phasing	✓	✓	✓		✓
J	7 Pin MS W/Plug A, B, Z - Std. Phasing	✓	✓	✓		✓
K	7 Pin MS W/Plug A, A\, B,B\ - Std. Phasing	✓	✓	✓		✓
S	7 Pin MS W/Plug A-quad-B - Dynapar Phasing	✓	✓	✓		✓
T	7 Pin MS W/Plug A, A\ - Dynapar Phasing	✓	✓	✓		✓
U	7 Pin MS W/Plug A, B, Z - Dynapar Phasing	✓	✓	✓		✓
V	7 Pin MS W/Plug A, A\, B,B\ - Dynapar Phasing	✓	✓	✓		✓
P	Small Industrial Style - Std. Pinout & Plug	✓	✓	✓		
G	Small Industrial Style - Northstar Pinout & Plug	✓	✓	✓		
R	10 Pin mini Twist Lock with Plug	✓	✓	✓		
W	Flexible Cable with Sealing Gland	✓	✓	✓		
Y	10 Pin MS with Plug on 12" cable	✓	✓	✓		
H	Conduit Box, Terminal Block & 1/2" NPT	✓	✓	✓	✓	
M	Conduit Box, Terminal Block, 3/4" NPT+Chord	✓	✓	✓	✓	
N	Conduit Box, Terminal Block & 1" NPT	✓	✓	✓	✓	
8	Conduit Box, Terminal Block & 25mm	✓	✓	✓	✓	

ERMEC
ERMEC, S.L. BARCELONA
C/ Francesc Teixidó, 22
08918 Badalona SPAIN
Tel. +34 902 450 160
info@ermec.com
www.ermec.com
ERMEC, S.L. - MADRID
C/ Puerto Rico, 4
28222 Majadahonda (Madrid) SPAIN
bilbao@ermec.com
portugal@ermec.com

XR115 SMARTSAFE™ ENCODER -Incremental - Magnetic - Hollow Shaft - Hazardous Duty

Certifications:

- ATEX/IECEx Zone 1 & 21 Group IIC
- cULus Class I Div 1 and Zone 0 Group A,B,C,D
- ATEX/IECEx Zone 2 & 22 Group IIC
- cULus Class I Div. 2 Groups A,B,C,D

SPECIFICATIONS

Operating Power: (add load and cable drive current as req'd)
Division 1, Zone 1 (XRB3): 12-24VDC In/Out, Nom. 200 mA
Division 2, Zone 2: 5-24VDC In/Out, 150mA
Output Format: A Quad B with marker (A, /A, B, /B, Z, /Z)
Frequency Range: 0 to 165 KHz
Maximum Cable Length:
Division 1, Zone 1: Encoder 500' Isolator 1000'
Division 2, Zone 2 (5 to 12 VDC in): 500'
Division 2, Zone 2 (15 to 24 VDC in): 250'
Temperature: -40°C to 80°C (storage -40°C to 100°C)
Environmental: IP54 (see manual for details)
Vibration: 5-2000 Hz, 20 G, 100 G Shock
Weight: 2-3 lb [.9-1.4 kg]
Warranty: 2 Year No-Hassle
See installation drawings for Warnings and Limitations

XR115 SMARTSafe™ 115mm modular incremental quadrature rotary encoders are a breakthrough in hazardous duty encoders. They are ATEX and UL approved and offer incredibly reliable no-bearing construction! SMARTSafe™ encoders can be used in gas and ATEX dust hazardous environments. Also available: hollow shaft models (XR45, XR685), shafted models (XR4F, XR485), and no-bearing modular encoders to fit other flange sizes (XR56, XR85, XR125, XR850).

For applications requiring ATEX/IECEx Zone 2 or 22 or UL Class I, Division 2 (Gas) Groups A,B,C,D use the XR115 directly in your application, with no barrier, isolator or cable gland required.

For applications requiring UL Division 1, ATEX/IECEx Zone 1 or 21 protection use the XRB3 isolator in your control cabinet which permits the use of intrinsically safe wiring instead of explosion-proof conduit or glands. The XR115 can also be used in UL Class I Div 1 & Zone 0 applications using the XRB3 Isolator.

Unlike the competition, Avtron SMARTSafe™ encoder systems are protected against short circuits, power-to-output wiring, and output-to-ground faults.

Instead of relying on a tiny optical encoder with weak bearings, install the most rugged encoders available for your drilling or industrial applications. Vibration, shock, liquids, dust and dirt won't harm SMARTSafe™ encoders! Paint booths, draw works, coil tubing rigs...XR115 can keep them all working 24/7/365.

Eliminate the biggest cause of Industrial Encoder failures. Eliminate the bearings with XR115 Hazardous Duty Encoders

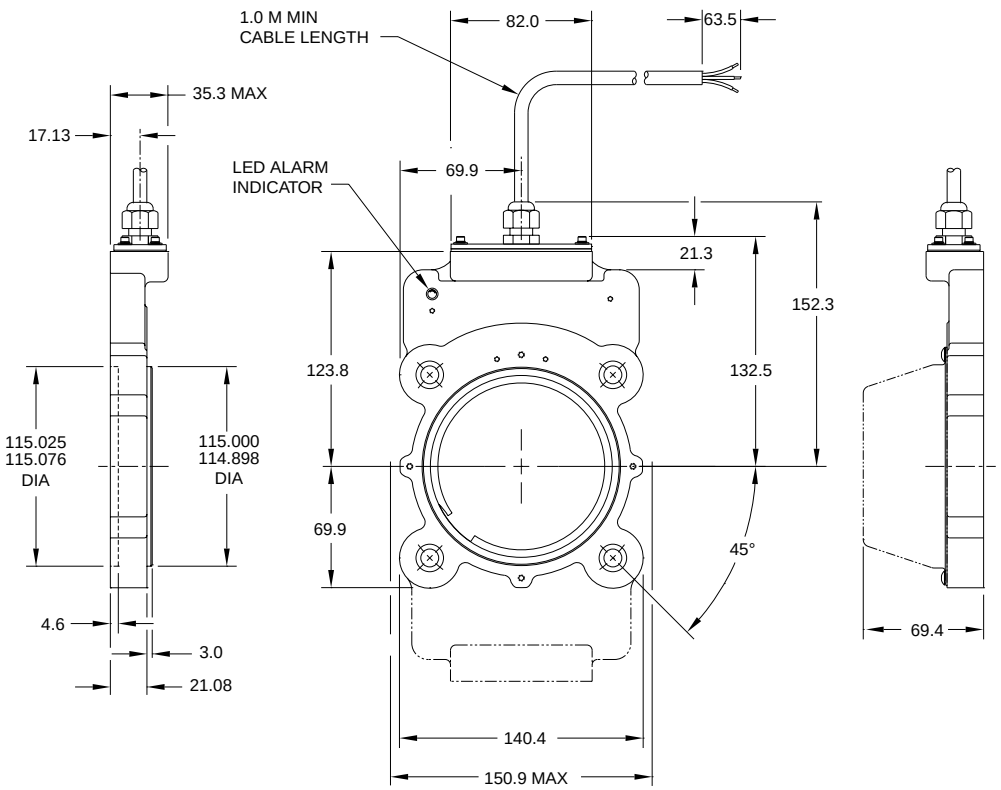

ERMEC
ERMEC, S.L. BARCELONA
C/ Francesc Teixidó, 22
08918 Badalona SPAIN
Tel. +34 902 450 160
info@ermec.com
www.ermec.com
ERMEC, S.L. - MADRID
C/ Puerto Rico, 4
28222 Majadahonda (Madrid) SPAIN
bilbao@ermec.com
portugal@ermec.com

XR115 SELECTION GUIDE

X	R	1	1	5										

MODEL	HOUSING TYPE	SHAFT SIZE (METRIC)	COVER STYLE	LINE DRIVER	LEFT OUTPUT PPR	RIGHT OUTPUT PPR	CONNECTOR	SPECIAL OPTIONS
XR115	**1 -** Single Output **2 -** Dual Output	**C0 -** None-std. Shaft Size **XX -** None Thru Shaft Rotor: **D2 -** 10mm **DA -** 11mm **D3 -** 12mm **DB -** 14mm **DC -** 15mm **DD -** 16mm **D4 -** 18mm **DE -** 19mm **DF -** 24mm **DG -** 28mm **DH -** 30mm **DT -** 32mm **DJ -** 36mm **DK -** 38mm **DL -** 42mm **DM -** 45mm **DN -** 48mm **DP -** 52mm **DR -** 55mm **DS -** 60mm **MU -** 65mm* **MV -** 70mm* **MW -** 75mm* **MY -** 80mm* **MZ -** 85mm*	**E -** Extended Shaft Cover **F -** Flat Cover **T -** Flat Thru-Hole Cover with Shaft Seal. **D -** Dome Cover	See Table Below	**F -** 60 **G -** 100 **H -** 120 **A -** 128 **L -** 240 **N -** 256 **P -** 300 **E -** 360 **B -** 480 **Q -** 500 **R -** 512 **S -** 600 **V -** 900 **J -** 960 **Y -** 1024 **Z -** 1200 **3 -** 2000 **4 -** 2048 **5 -** 2500 **D -** 4096 **8 -** 4800 **9 -** 5000 **0 -** Non-std.	**F -** 60 **G -** 100 **H -** 120 **A -** 128 **L -** 240 **N -** 256 **P -** 300 **E -** 360 **B -** 480 **Q -** 500 **R -** 512 **S -** 600 **V -** 900 **J -** 960 **Y -** 1024 **Z -** 1200 **3 -** 2000 **4 -** 2048 **5 -** 2500 **D -** 4096 **8 -** 4800 **9 -** 5000 **0 -** Non-std. **X -** None	See Table Below	**000 -** No Modification **004 -** Add Housing Drain (single output only) **005 -** Super Magnetic Shielding **4xx -** Special PPR **9xx -** Special Cable Length, xx=length in feet

* Set Screw Rotor only

	Description	ATE / IECEx Zone 1 & 21	ATEX / IECEx Zone 2 & 22	Class I & II Div. 1 & Zone 0	Class I & II Div. 2 Listed	Class I & II Div. 2 Recognized
	Voltage In / Out	5-7 / 5	5-24 / 5-24	5-7 / 5	5-24 / 5-24	5-24 / 5-24
	Line Driver Code	H	7	F	G	R
Code	**Required Isolator**	**XRB3**	**None**	**XRB3**	**None**	**None**
A	10 Pin MS W/O Plug - Std Phasing	✓	✓	✓		✓
B	10 Pin MS W/O Plug - Dynapar Phasing	✓	✓	✓		✓
C	10 Pin MS W/Plug - Std Phasing	✓	✓	✓		✓
D	10 Pin MS W/Plug - Dynapar Phasing	✓	✓	✓		✓
E	7 Pin MS W/Plug A-quad-B - Std. Phasing	✓	✓	✓		✓
F	7 Pin MS W/Plug A, A\ - Std. Phasing	✓	✓	✓		✓
J	7 Pin MS W/Plug A, B, Z - Std. Phasing	✓	✓	✓		✓
K	7 Pin MS W/Plug A, A\, B,B\ - Std. Phasing	✓	✓	✓		✓
S	7 Pin MS W/Plug A-quad-B - Dynapar Phasing	✓	✓	✓		✓
T	7 Pin MS W/Plug A, A\ - Dynapar Phasing	✓	✓	✓		✓
U	7 Pin MS W/Plug A, B, Z - Dynapar Phasing	✓	✓	✓		✓
V	7 Pin MS W/Plug A, A\, B,B\ - Dynapar Phasing	✓	✓	✓		✓
P	Small Industrial Style - Std. Pinout & Plug	✓	✓	✓		
G	Small Industrial Style - Northstar Pinout & Plug	✓	✓	✓		
R	10 Pin mini Twist Lock with Plug	✓	✓	✓		
W	Flexible Cable with Sealing Gland	✓	✓	✓		
Y	10 Pin MS with Plug on 12" cable	✓	✓	✓		
H	Conduit Box, Terminal Block & 1/2" NPT	✓	✓	✓	✓	
M	Conduit Box, Terminal Block, 3/4" NPT+Chord	✓	✓	✓	✓	
N	Conduit Box, Terminal Block & 1" NPT	✓	✓	✓	✓	
8	Conduit Box, Terminal Block & 25mm	✓	✓	✓	✓	

ERMEC
ERMEC, S.L. BARCELONA
C/ Francesc Teixidó, 22
08918 Badalona SPAIN
Tel. +34 902 450 160
info@ermec.com
www.ermec.com
ERMEC, S.L. - MADRID
C/ Puerto Rico, 4
28222 Majadahonda (Madrid) SPAIN
bilbao@ermec.com
portugal@ermec.com

XR125 SMARTSAFE™ ENCODER -Incremental - Magnetic - Hollow Shaft - Hazardous Duty

Certifications:

- ATEX/IECEx Zone 1 & Zone 21 Group IIC
- cULus Class I, Division 1 and Zone 0 Group A,B,C,D
- ATEX/IECEx Zone 2 & 22 Group IIC
- cULus Class I, Division 2 Group A,B,C,D

XR125 SMARTSafe™ 12.5" modular incremental quadrature rotary encoders are a breakthrough in hazardous duty encoders to fit large shaft applications. They are ATEX/IECEx and cULus approved and offer incredibly reliable no-bearing construction! SMARTSafe™ encoders can be used in ATEX/IECEx gas and dust and UL gas environments. Also available: hollow shaft models (XR45, XR685), shafted models (XR4F, XR485), no-bearing modular encoders to fit other flange sizes (XR56, XR85, XR115, XR850), and modular sensors (XR5, XR12).

For applications requiring ATEX/IECEx Zone 2 or 22 or UL Class I, Division 2, Groups A,B,C,D use the XR125 directly in your application, with no barrier, isolator or cable gland required.

For applications requiring UL Division 1, ATEX/IECEx Zone 1 or 21 use the XRB3 isolator in your control cabinet which permits the use of intrinsically safe wiring instead of explosion proof conduit or glands. The XR125 can also be used in UL Class I Division 1 and Zone 0 applications using the XRB3 Isolator.

Unlike the competition, Avtron SMARTSafe™ encoder systems are protected against short circuits, power-to-output wiring, and output-to-ground faults.

Instead of mounting a tiny optical encoder with weak bearings on a wobbling stub shaft, mount XR125 directly on your main application shaft. Vibration, shock, liquids, dust and dirt won't harm SMARTSafe™ XR125 encoders! Paint booths, draw works, coil tubing rigs...XR125 can keep them all working 24/7/365.

Eliminate the biggest cause of industrial encoder failure--eliminate the bearings with XR125 hazardous duty encoders.

SPECIFICATIONS

Operating Power: (add cable drive current as req'd)
Division 1, Zone 1 (XRB3): 12-24VDC In/Out, Nom. 200 mA
Division 2, Zone 2: 5-24VDC In/Out, 100mA
Output Format: A Quad B with marker (A, /A, B, /B, Z, /Z)
Frequency Range: 0 to 165 KHz
PPR: 8-8192
Speed: 5000 RPM Max. (contact factory for higher speeds)
Maximum Cable Length:
Division 1, Zone 1 (Local/Remote): 1000' [300m] / 400' [120m]
Division 2, Zone 2: 500' [150m] @ 5-12V; 200' [60m] @ 24V
Temperature: -40°C to 80°C (Storage -40°C to 100°C)
Environmental: Electronics-IP67 (see manual for details)
Vibration: 5-2000 Hz, 20 G; 100 G Shock
Weight: 15-18 lb [7-8 kg]
Warranty: 2 Year No-Hassle
See installation drawings for Warnings and Limitations

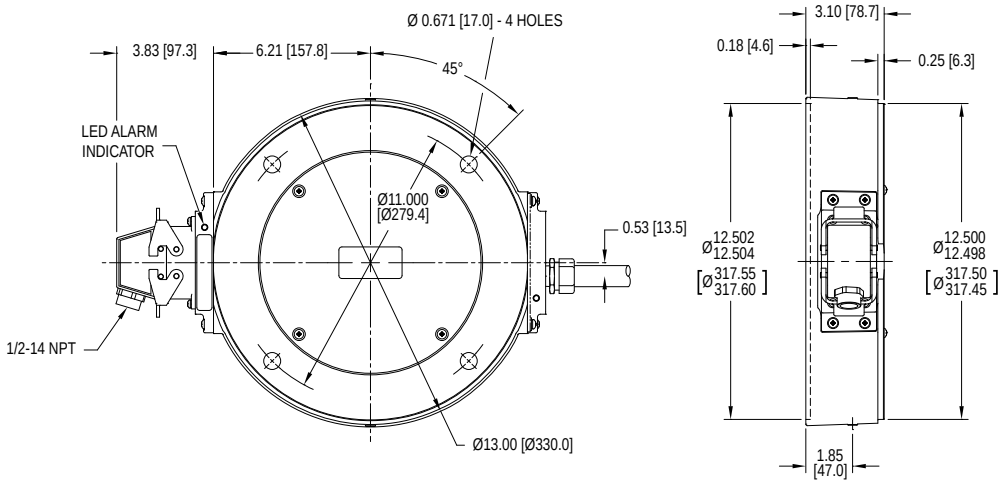

ERMEC
ERMEC, S.L. BARCELONA
C/ Francesc Teixidó, 22
08918 Badalona SPAIN
Tel. +34 902 450 160
info@ermec.com
www.ermec.com
ERMEC, S.L. - MADRID
C/ Puerto Rico, 4
28222 Majadahonda (Madrid) SPAIN
bilbao@ermec.com
portugal@ermec.com

XR125 SELECTION GUIDE

| X | R | 1 | 2 | 5 | | |

XR850 SMARTSAFE™ ENCODER -Incremental - Magnetic - Hollow Shaft - Hazardous Duty

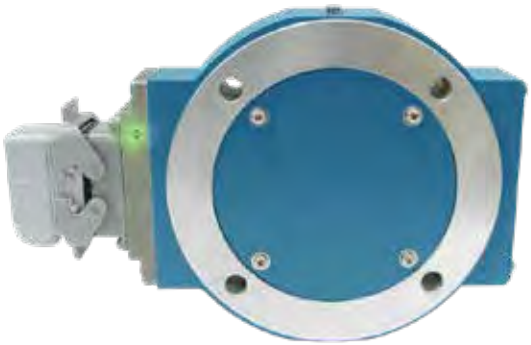

Certifications:

- ATEX/IECEx Zone 1 & 21 Group IIC
- cULus Class I Div 1 and Zone 0 Group A,B,C,D
- ATEX/IECEx Zone 2 & 22 Group IIC
- cULus Class I Div. 2 Groups A,B,C,D

SPECIFICATIONS

Operating Power: (add load and cable drive current as req'd)
Division 1, Zone 1 (XRB3): 12-24VDC In/Out,150 mA
Division 2, Zone 2: 5-24VDC In/Out, 150mA
Output Format: A Quad B with marker (A, /A, B, /B, Z, /Z)
Frequency Range: 0 to 165 KHz
PPR: 8-6000
Speed: 5000 RPM
Maximum Cable Length:
Division 1, Zone 1: Encoder 500' Isolator 1000'
Division 2, Zone 2 (5 to 12 VDC in): 500'
Division 2, Zone 2 (15 to 24 VDC in): 250'
Temperature: -40°C to 80°C (storage -40°C to 100°C)
Environmental: IP54 (see manual for details)
Warranty: 2 Year No-Hassle
See installation drawings for Warnings and Limitations

XR850 SMARTSafe™ 8.5" modular incremental quadrature rotary encoders are a breakthrough in hazardous duty encoders. They are ATEX/IECEx, cULus approved and offer reliable no-bearing construction! SMARTSafe™ encoders can be used in UL gas and ATEX/IECEx gas and dust hazardous environments. Also available: hollow shaft models (XR45, XR685), shafted models (XR4F, XR485), no-bearing modular encoders to fit other flange sizes (XR56, XR85, XR115, XR125, XR850), and modular sensors (XR5, XR12).

For applications requiring ATEX/IECEx Zone 2 or 22 or UL Class I, Division 2, Groups A,B,C,D, use the XR850 directly in your application, with no barrier, isolator or cable gland required.

For applications requiring UL Division 1, ATEX/IECEx Zone 1 or 21 use the XRB3 isolator in your control cabinet which permits the use of intrinsically safe wiring instead of explosion proof conduit or glands. The XR850 can also be used in UL Class I, DIV 1 and Zone 0 applications using the XRB3 Isolator.

Unlike the competition, Avtron SMARTSafe™ encoder systems are protected against short circuits, power-to-output wiring, and output-to-ground faults.

Instead of mounting a tiny optical encoder with weak bearings on a wobbling stub shaft, mount XR850 directly on your main application shaft. Vibration, shock, liquids, dust and dirt won't harm SMARTSafe™ XR850 encoders! Paint booths, draw works, coil tubing rigs...XR850 can keep them all working 24/7/365.

Eliminate the biggest cause of industrial encoder failure eliminate the bearings with XR850 hazardous duty encoders.

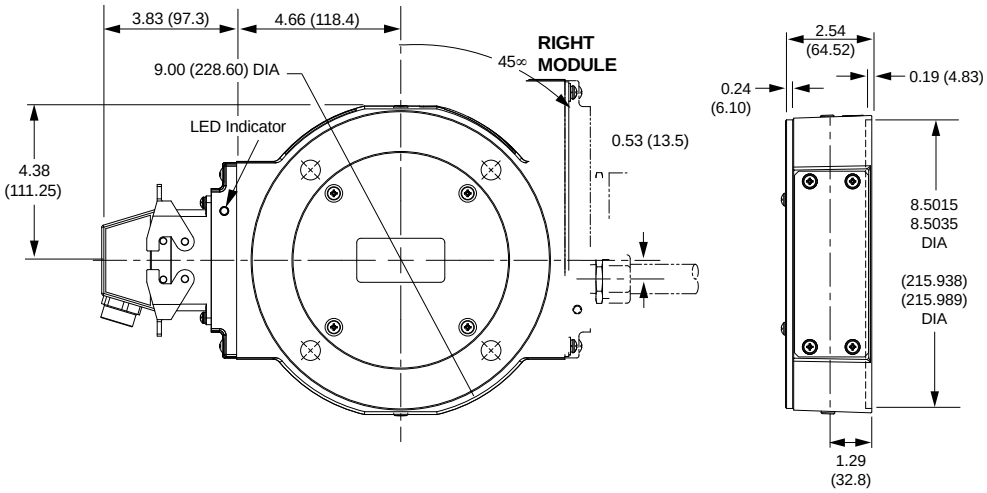

ERMEC
ERMEC, S.L. BARCELONA
C/ Francesc Teixidó, 22
08918 Badalona SPAIN
Tel. +34 902 450 160
info@ermec.com
www.ermec.com
ERMEC, S.L. - MADRID
C/ Puerto Rico, 4
28222 Majadahonda (Madrid) SPAIN
bilbao@ermec.com
portugal@ermec.com

XR850 SELECTION GUIDE

X	R	8	5	0	☐☐	☐	☐	☐	☐	☐	☐	☐☐☐

MODEL	ROTOR CODE		COVER STYLE	LEFT MODULE		RIGHT MODULE		CONNECTOR OPTIONS	SPECIAL OPTIONS
				LINE DRIVER	PPR	LINE DRIVER	PPR		
XR850	**US** **CB -** 0.625 **CA -** 0.750 **CC -** 0.875 **CE -** 1.000 **CF -** 1.125 **CH -** 1.375 **C8 -** 1.500 **CJ-** 1.625 **CK -** 1.750 **CL -** 1.875 **CM -** 2.000 **CN -** 2.125 **CQ -** 2.250 **CP -** 2.375 **CR -** 2.500 **CT -** 2.625 **CS -** 2.771 **C2 -** 2.875 **CU -** 3.000 **CW -** 3.250 **CY -** 3.375 **CZ -** 3.421 **CV -** 3.438 **C3 -** 3.500 **TD -** 3.625 **TG -** 3.750* **T4 -** 3.875* **T1 -** 4.000* **T7 -** 4.250* **T6 -** 4.500*	**Metric** **DE -** 19mm (h7) **DF -** 30mm **DJ -** 42mm **DP -** 60mm **DT -** 70mm (h7) **DS -** 70mm (m6) **DZ -** 80mm (h7) **DY -** 80mm (f6) **D2 -** 80mm (g6) **D3 -** 90mm (m6) **MD -** 93mm (g6) **M4 -** 95mm (m6) **M8 -** 110mm (g6)	**B -** Thru Shaft Cover w/ inboard seal plate **D -** Dome **F -** Flat Cover **N** - Flat Cover w/ inboard seal plate **T** - Thru Shaft Cover **X** - None	See Table Below	**F -** 60 **C -** 64 **G -** 100 **H -** 120 **A -** 128 **L -** 240 **N -** 256 **P -** 300 **E -** 360 **B -** 480 **Q -** 500 **R -** 512 **S -** 600 **V -** 900 **J -** 960 **Y -** 1024 **Z -** 1200 **6 -** 1800 **3 -** 2000 **4 -** 2048 **5 -** 2500 **D -** 4096 **8 -** 4800 **9 -** 5000 **0 -** special **X -** none	See Table Below	**F -** 60 **C -** 64 **G -** 100 **H -** 120 **A -** 128 **L -** 240 **N -** 256 **P -** 300 **E -** 360 **B -** 480 **Q -** 500 **R -** 512 **S -** 600 **V -** 900 **J -** 960 **Y -** 1024 **Z -** 1200 **6 -** 1800 **3 -** 2000 **4 -** 2048 **5 -** 2500 **D -** 4096 **8 -** 4800 **9 -** 5000 **0 -** special **X -** none	See Table Below	**000 -** None **003 -** Include analog signal converter (K661) **004 -** Super sensor shielding **4XX -** Special PPR **700 -** Large Motor Stator Adapter

* Set Screw Rotor only

	Description	ATE / IECEx Zone 1 & 21	ATEX / IECEx Zone 2 & 22	Class I & II Div. 1 & Zone 0	Class I & II Div. 2 Listed	Class I & II Div. 2 Recognized
	Voltage In / Out	5-7 / 5	5-24 / 5-24	5-7 / 5	5-24 / 5-24	5-24 / 5-24
	Line Driver Code	H	7	F	G	R
Code	**Required Isolator**	**XRB3**	**None**	**XRB3**	**None**	**None**
A	10 Pin MS W/O Plug - Std Phasing	✓	✓	✓		✓
B	10 Pin MS W/O Plug - Dynapar Phasing	✓	✓	✓		✓
E	7 Pin MS W/Plug A-quad-B - Std. Phasing	✓	✓	✓		✓
F	7 Pin MS W/Plug A, A\ - Std. Phasing	✓	✓	✓		✓
J	7 Pin MS W/Plug A, B, Z - Std. Phasing	✓	✓	✓		✓
K	7 Pin MS W/Plug A, A\, B,B\ - Std. Phasing	✓	✓	✓		✓
S	7 Pin MS W/Plug A-quad-B - Dynapar Phasing	✓	✓	✓		✓
T	7 Pin MS W/Plug A, A\ - Dynapar Phasing	✓	✓	✓		✓
U	7 Pin MS W/Plug A, B, Z - Dynapar Phasing	✓	✓	✓		✓
V	7 Pin MS W/Plug A, A\, B,B\ - Dynapar Phasing	✓	✓	✓		✓
P	Large Industrial Style - Std. Pinout & Plug	✓	✓	✓		
G	Large Industrial Style - Northstar Pinout & Plug	✓	✓	✓		
R	10 Pin mini Twist Lock with Plug	✓	✓	✓		
W	Flexible Cable with Sealing Gland	✓	✓	✓		
4	Conduit Box, Terminal Block & 1/2" NPT	✓	✓	✓	✓	
5	Conduit Box, Terminal Block, 3/4" NPT+Chord	✓	✓	✓	✓	
6	Conduit Box, Terminal Block & 1" NPT	✓	✓	✓	✓	
7	Conduit Box, Terminal Block & 25mm	✓	✓	✓	✓	

ERMEC
ERMEC, S.L. BARCELONA
C/ Francesc Teixidó, 22
08918 Badalona SPAIN
Tel. +34 902 450 160
info@ermec.com
www.ermec.com
ERMEC, S.L. - MADRID
C/ Puerto Rico, 4
28222 Majadahonda (Madrid) SPAIN
bilbao@ermec.com
portugal@ermec.com

XPH8 SMARTSAFE™ ENCODER -Incremental - Magnetic - Hollow Shaft - Hazardous Duty

Certifications:

- Class I Div 1, Groups C and D
- Class I Zone 1, Ex db ia IIB T4 Gb
- Class I Zone 1, AEx db ia IIB T4 Gb
- Ex db ia IIB T4 Gb (ATEX/IECEx)

XPH8 SMARTSafe™ encoders are the world's first explosion-proof encoders with removable electronics and no external barrier! They are cULus, ATEX, AEx & IECEx certified and offer incredibly reliable no-bearing construction! SMARTSafe™ XPH8 encoders can be used in ATEX/IECEx, cUL AEX, and UL gas hazardous environments. Also available: no-bearing modular sensors (XP5), as well as intrinsically safe models (XR5, XR12, XR56, XR125, XR485, XR685, XR850) and hollow shaft models M6C.

For applications requiring ATEX/IECEx Zone 1 or 2 or cULus Class I, Division 1 or 2, Groups C & D use the XPH8 directly in your application with no barrier or isolator required.

Unlike the competition, Avtron SMARTSafe™ encoder systems are protected against short circuits, power-to-output wiring, and output-to-ground faults. They feature full diagnostics: it's easy to determine that signal quality is good-just look for the green LED. Worried about wiring short circuits and errors? XPH8 will indicate any short circuit conditions with an orange LED and will survive this condition!

No encoder bearing failures, no more sealing problems. Mount XPH8 directly on your motor. Top drives, draw works, coil tubing, paint lines...so many applications benefit from a more reliable no-bearing encoder. Vibration, shock, liquids, dust and dirt won't harm SMARTSafe™ XPH8 encoders!

Eliminate the biggest cause of hazardous duty encoder failure--eliminate the bearings with XPH8 hazardous duty encoders.

SPECIFICATIONS

Operating Power:
5-24VDC in/out
400mA max @ 5V; 200mA max @ 12V; 100mA max @ 24V (plus cable load)
Output Format: A Quad B with marker (A, /A, B, /B, Z, /Z)
Frequency Range: 0 to 250 KHz
PPR: 8-100000
Speed: 6000 RPM Max. (contact factory for higher speeds)
Maximum Cable Length: 1000 ft (305 m) (contact factory for longer distances)
Axial Rotor Positioning: Up to +/-0.100" [+/-2.54 mm] movement/misalignment
Sensor-Rotor Gap: 0.040", +0.015/-0.030" [1 mm+0.38/-0.76]
Temperature: -50°C to 85°C (rotor -50°C to 100°C continuous, +150°C intermittent)
Environmental: IP65 fully potted sensors
Vibration: 5-2000 Hz, 18 G; 100 G Shock
Weight: 10-14 lb [4.5-6.4 kg]
Warranty: 2 Year No-Hassle

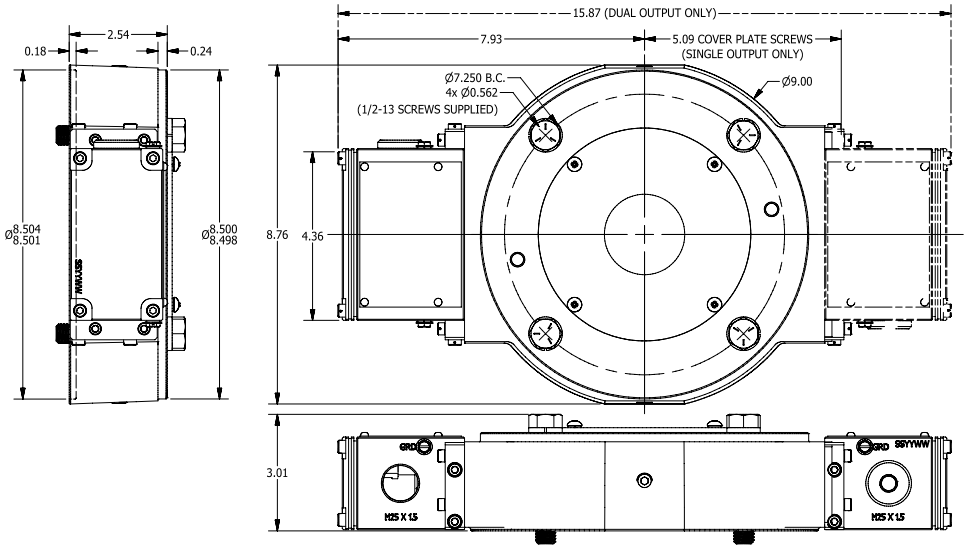

ERMEC
ERMEC, S.L. BARCELONA
C/ Francesc Teixidó, 22
08918 Badalona SPAIN
Tel. +34 902 450 160
info@ermec.com
www.ermec.com
ERMEC, S.L. - MADRID
C/ Puerto Rico, 4
28222 Majadahonda (Madrid) SPAIN
bilbao@ermec.com
portugal@ermec.com

XPH8 SELECTION GUIDE

| X | P | H | 8 | | |

M6C ENCODER -Incremental - Magnetic - Hollow Shaft - Hazardous Duty

SPECIFICATIONS

Operating Power:
Volts: 5-24 VDC **Current** 120 mA, no load
Output Format: A, /A, B, /B, Optional Marker Z, /Z
Frequency Range: 0 to 150 KHz
PPR: 240-1200
Speed: 5000 RPM Max. Std.
Temperature: 80°C to -40°C (-20°C standard)
Chemical: Polyurethane enamel paint protects against salt spray, mild acids, and bases
Enclosure Rating: IP66
Explosion Protection:
ATEX 0539 II 2 G Ex d e IIB T4 Gb (Tamb = -40/-20°C to +80°C)
IECEx Ex d e IIB T4 Gb (Tamb = -40/-20°C to +80°C)
Weight: 18 lb / 8 kg
Warranty: 1 Year No-Hassle

M6C explosion protected ATEX and IECEx rated severe mill duty rotary encoders are designed for direct mounting on motor or load shafts, or 1" or 1 1/8" [25.4mm or 28.6mm]. Other models available include no-bearing units such as XR5, XR56 and XR850, shafted models including XR4F and XR485. These models also include ATEX, IECEx, UL, cUL, NEC and CSA ratings.

The M6C is an updated model which directly replaces our previous M6 encoder. No barrier or isolator is required – mount M6C install directly into any ATEX or IECEx Zone 1 application.

Why take a chance with weak optical encoders on your drilling rig? The M6C features Avtron Encoders' rugged magnetic sensor and solid metal rotor technology. Our shatterproof, moisture proof systems ensure your application has maximum uptime. The hollow shaft (tethered) models offer direct mounting on shafts from 1" or 1 1/8", without flanges, reducers, couplings, or other hardware. No rework is needed; just mount the encoder directly on the shaft, and secure the tether arm. The heavy duty bearings withstand runout and vibration that destroy lesser encoders.

M6C also includes a complete wiring protection system – it can survive all types of wiring errors and drive signals down the longest cables.
For more information on keeping your rotary encoders working in oil and gas applications, visit our oil and gas blog.

We believe explosion protected encoders should also be ready to withstand the rough drilling environment. Try the M6C today!

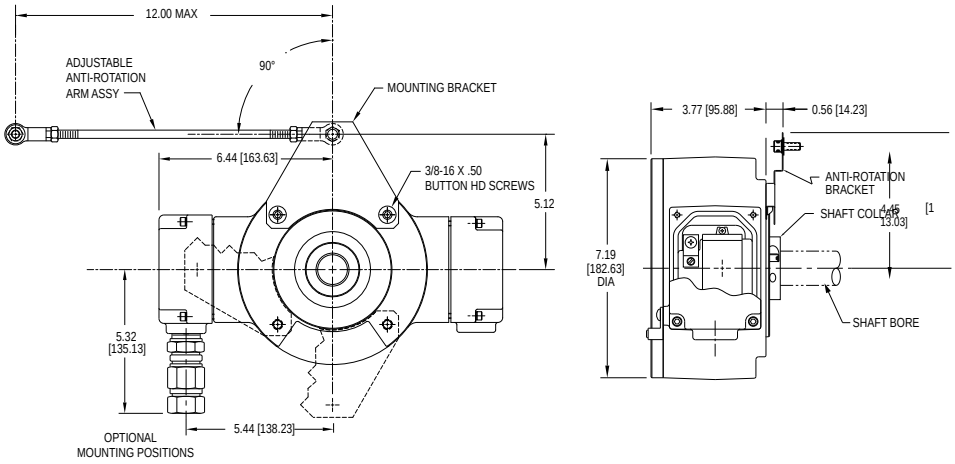

ERMEC
ERMEC, S.L. BARCELONA
C/ Francesc Teixidó, 22
08918 Badalona SPAIN
Tel. +34 902 450 160
info@ermec.com
www.ermec.com
ERMEC, S.L. - MADRID
C/ Puerto Rico, 4
28222 Majadahonda (Madrid) SPAIN
bilbao@ermec.com
portugal@ermec.com

M6C SELECTION GUIDE

M	6	C	-										

MODEL	BORE SIZE	MOUNTING STYLE	LINE DRIVER	LEFT OUTPUT RANGE	RIGHT OUTPUT RANGE	BASE PPR	MARKER	CONNECTOR	SPECIAL OPTIONS
M6C-	**0 -** Non-Standard **4 -** 1” **5 -** 1 1/8”	**S -** End of Shaft	**1 -** 5 to 24 VDC **8 -** 6.5 to 24 VDC protected	**X -** None **L -** Low Range (Base PPR x 1/2) **M -** Medium Range (Base PPR x 1) **H -** High Range (Base PPR x 2)	**X -** None **L -** Low Range (Base PPR x 1/2) **M -** Medium Range (Base PPR x 1) **H -** High Range (Base PPR x 2)	**48 -** 480 **51 -** 512 **60 -** 600	**Z -** Marker **- -** None	**T -** Conduit Box, Terminal Block, 3/4” NPT **W -** Conduit Box, Terminal Block and Wire Gland	**000 -** None **001 -** Low Temp (-40°C) **003 -** Torque Arm B28390 **005 -** Low Temp (-40°C) & Torque Arm

	AVAILABLE RESOLUTIONS		
	-48 OPTION	**-51 OPTION**	**-60 OPTION**
LOW	240	256	300
MEDIUM	480	512	600
HIGH	960	1024	1200

ERMEC
ERMEC, S.L. BARCELONA
C/ Francesc Teixidó, 22
08918 Badalona SPAIN
Tel. +34 902 450 160
info@ermec.com
www.ermec.com
ERMEC, S.L. - MADRID
C/ Puerto Rico, 4
28222 Majadahonda (Madrid) SPAIN
bilbao@ermec.com
portugal@ermec.com

XR685 SMARTSAFE™ ENCODER -Incremental - Magnetic - Hollow Shaft - Hazardous Duty

Certifications:

- ATEX/IECEx Zone 1 & Zone 21 Group IIC
- cULus Class I, Division 1 and Zone 0 Group A,B,C,D
- ATEX/IECEx Zone 2 & 22 Group IIC
- cULus Class I, Division 2 Group A,B,C,D

XR685 SMARTSafe™ hollow shaft incremental quadrature rotary encoders are a breakthrough in hazardous duty encoders. They are ATEX/IECEx and UL approved and offer huge bearings for maximum life. SMARTSafe™ encoders can be used in ATEX/IECEx gas and dust and UL gas hazardous environments. Also available: hollow shaft models in other bore sizes (XR45), shafted models (XR4F, XR485), no-bearing modular encoders (XR56, XR85, XR115, XR125, XR850), and modular sensors (XR5, XR12).

For applications requiring ATEX/IECEx Zone 2 or 22 or UL Class I, Division 2, Groups A,B,C,D use the XR685 directly in your application, with no barrier, isolator or cable gland required.

For applications requiring UL Division 1, ATEX/IECEx Zone 1 or 21 use the XRB3 isolator in your control cabinet which permits the use of intrinsically safe wiring instead of explosion proof conduit or glands. XRB3 Isolator Systems enable use in Class I Div 1 and Class I Zone 0 applications.

Unlike the competition, Avtron SMARTSafe™ encoder systems are fully protected against short circuits, power-to-output wiring, and output-to-ground faults at every point. Wiring errors won't harm this system!

Instead of depending on a tiny optical encoder with weak bearings use XR685. Vibration, shock, liquids, dust and dirt won't harm SMARTSafe™ XR685 encoders! Paint booths, draw works, coil tubing rigs...XR685 can keep them all working 24/7/365.

Eliminate encoder failures in your hazardous environment application-select XR685 today!

SPECIFICATIONS

Operating Power: (add cable drive current as req'd)
Division 1, Zone 1 (XRB3): 12-24 VDC In/Out, Nom. 200 mA
Division 2, Zone 2: 5-24VDC In/Out, 100mA
Output Format: A Quad B with marker (A, /A, B, /B, Z, /Z)
Frequency Range: 0 to 165 KHz
PPR: 8-5000
Speed: 4000 RPM Max. (contact factory for higher speeds)
Maximum Cable Length:
Division 1, Zone 1: 400' [120m]
Division 2, Zone 2: 500' [150m] @ 5-12V; 200' [60m] @ 24V
Temperature: -40°C to 80°C (Storage -40°C to 100°C)
Environmental: Electronics-IP67, IP66 overall (see manual for details)
Vibration: 5-2000 Hz, 18 G; 100 G Shock
Weight: 15 lb [6.4 kg]; 17 lb [7.7 kg] dual output
Warranty: 2 Year No-Hassle
See installation drawings for Warnings and Limitations

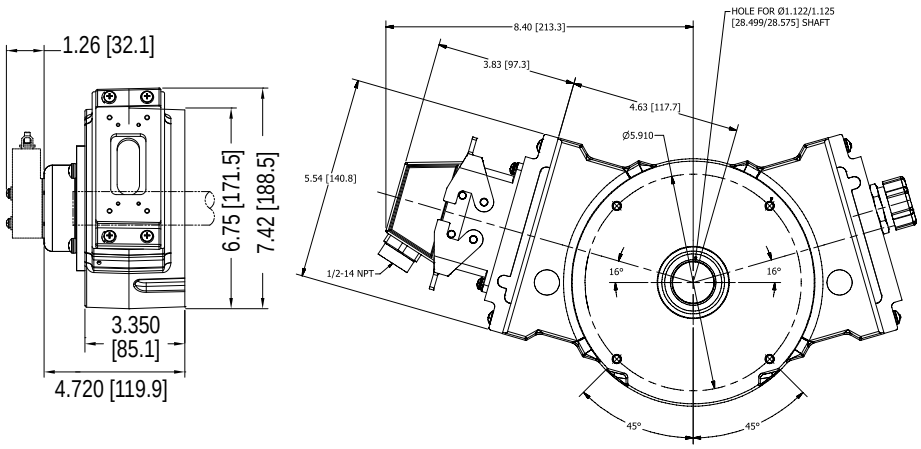

ERMEC
ERMEC, S.L. BARCELONA
C/ Francesc Teixidó, 22
08918 Badalona SPAIN
Tel. +34 902 450 160
info@ermec.com
www.ermec.com
ERMEC, S.L. - MADRID
C/ Puerto Rico, 4
28222 Majadahonda (Madrid) SPAIN
bilbao@ermec.com
portugal@ermec.com

XR685 SELECTION GUIDE

X	R	6	8	5											

MODEL	TEMP RATING	TETHER	COVER STYLE	LEFT MODULE		RIGHT MODULE		CONNECTOR OPTIONS	SPECIAL OPTIONS
				LINE DRIVER	PPR	LINE DRIVER	PPR		
XR685	**N -** -20°C to 80°C **C -** -40°C to 80°C	**X -** None **1 -** Threaded Rod (B32809)	**E -** Standard (EOS) **T -** Through shaft	See Table Below	**F -** 60 **G -** 100 **H -** 120 **A -** 128 **L -** 240 **N -** 256 **P -** 300 **E -** 360 **B -** 480 **Q -** 500 **R -** 512 **S -** 600 **U -** 720 **V -** 900 **J -** 960 **W -** 1000 **Y -** 1024 **Z -** 1200 **2 -** 1500 **6 -** 1800 **3 -** 2000 **4 -** 2048 **5 -** 2500 **D -** 4096 **8 -** 4800 **9 -** 5000 **0 -** special **X -** None	See Table Below	**F -** 60 **G -** 100 **H -** 120 **A -** 128 **L -** 240 **N -** 256 **P -** 300 **E -** 360 **B -** 480 **Q -** 500 **R -** 512 **S -** 600 **U -** 720 **V -** 900 **J -** 960 **W -** 1000 **Y -** 1024 **Z -** 1200 **2 -** 1500 **6 -** 1800 **3 -** 2000 **4 -** 2048 **5 -** 2500 **D -** 4096 **8 -** 4800 **9 -** 5000 **0 -** special **X -** None	See Table Below	**000 -** None **004 -** Super magnetic shielding **005 -** Special 97mm rotor **4XX -** Special PPR **018 -** Add isolator **9XX -** Special cable length

	Description	ATE / IECEx Zone 1 & 21	ATEX / IECEx Zone 2 & 22	Class I & II Div. 1 & Zone 0	Class I & II Div. 2 Listed	Class I & II Div. 2 Recognized
	Voltage In / Out	5-7 / 5	5-24 / 5-24	5-7 / 5	5-24 / 5-24	5-24 / 5-24
	Line Driver Code	H	7	F	G	R
Code	**Required Isolator**	**XRB3**	**None**	**XRB3**	**None**	**None**
A	10 Pin MS W/O Plug - Std Phasing	✓	✓	✓		✓
B	10 Pin MS W/O Plug - Dynapar Phasing	✓	✓	✓		✓
E	7 Pin MS W/Plug A-quad-B - Std. Phasing	✓	✓	✓		✓
F	7 Pin MS W/Plug A, A\ - Std. Phasing	✓	✓	✓		✓
J	7 Pin MS W/Plug A, B, Z - Std. Phasing	✓	✓	✓		✓
K	7 Pin MS W/Plug A, A\, B,B\ - Std. Phasing	✓	✓	✓		✓
S	7 Pin MS W/Plug A-quad-B - Dynapar Phasing	✓	✓	✓		✓
T	7 Pin MS W/Plug A, A\ - Dynapar Phasing	✓	✓	✓		✓
U	7 Pin MS W/Plug A, B, Z - Dynapar Phasing	✓	✓	✓		✓
V	7 Pin MS W/Plug A, A\, B,B\ - Dynapar Phasing	✓	✓	✓		✓
P	Large Industrial Style - Std. Pinout & Plug	✓	✓	✓		
G	Large Industrial Style - Northstar Pinout & Plug	✓	✓	✓		
R	10 Pin mini Twist Lock with Plug	✓	✓	✓		
W	Flexible Cable with Sealing Gland	✓	✓	✓		
4	Conduit Box, Terminal Block & 1/2" NPT	✓	✓	✓	✓	
5	Conduit Box, Terminal Block, 3/4" NPT+Chord	✓	✓	✓	✓	
6	Conduit Box, Terminal Block & 1" NPT	✓	✓	✓	✓	
7	Conduit Box, Terminal Block & 25mm	✓	✓	✓	✓	

ERMEC, S.L. BARCELONA
C/ Francesc Teixidó, 22
08918 Badalona SPAIN
Tel. +34 902 450 160
info@ermec.com
www.ermec.com
ERMEC, S.L. - MADRID
C/ Puerto Rico, 4
28222 Majadahonda (Madrid) SPAIN
bilbao@ermec.com
portugal@ermec.com

XR4F SMARTSAFE™ ENCODER -Incremental - Magnetic - Shafted - Hazardous Duty

Certifications:

- ATEX/IECEx Zone 1 & 21 Group IIC
- cULus Class I Div 1 and Zone 0 Group A,B,C,D
- ATEX/IECEx Zone 2 & 22 Group IIC
- cULus Class I Div. 2 Groups A,B,C,D

XR4F solid shaft encoders are a unique industry first. By combining Avtron durable magnetic encoder technology with SMARTSafe™ systems, Avtron has created a truly durable solid shaft encoder which can be used in hazardous environments and applications. It is ATEX, IECEx & cULus certified. SMARTSafe™ encoders can be used in gas and ATEX dust hazard environments. Also available: hollow shaft models (XR45, XR685), NEMA style shafted model (XR485), and no-bearing modular encoders (XR56, XR85, XR115, XR125, XR850).

For applications requiring ATEX or IECEx Zone 2 or 22 or UL Class I, Division 2 use the XR4F directly with no barrier, isolator, special connector or cable gland required.

For applications requiring ATEX or IECEx Zone 1 or 21, we offer protection using the XRB3 isolator in your control cabinet to permit intrinsic safety wiring rather than explosion proof conduit or glands. For applications requiring NEC 500 UL Class I, Division 1, or NEC 505 (c)UL Class I, Zone 0, use the XRB3 isolator remotely and intrinsic safety wiring.

Unlike the competition, the Avtron SMARTSafe™ encoder systems are protected against short circuits, power-to-output wiring, and output-to-ground faults. Wiring errors won't harm this system.

Instead of relying on a tiny optical encoder with weak bearings, install the most rugged encoders available. Vibration, shock, liquids, dust and dirt won't harm SMARTSafe™ encoders! Mud pumps, paint booths, hazardous duty IEC motors...XR4F can keep them all working 24/7/365.

Select the Avtron XR4F SMARTSafe™ encoder to eliminate encoder problems in your hazardous duty application!

SPECIFICATIONS

Operating Power: (add load and cable drive current as req'd)
Division 1, Zone 1 (XRB3): 12-24VDC In/Out, Nom. 200 mA
Division 2, Zone 2: 5-24VDC In/Out, 150mA
Output Format: A Quad B with marker (A, /A, B, /B, Z, /Z)
Frequency Range: 0 to 165 KHz
Maximum Cable Length:
Division 1, Zone 1: Encoder 500' Isolator 1000'
Division 2, Zone 2 (5 to 12 VDC in): 500'
Division 2, Zone 2 (15 to 24 VDC in): 250'
Temperature: -40°C to 80°C (storage -40°C to 100°C)
Environmental: IP54 (see manual for details)
Vibration: 5-2000 Hz, 20 G, 100 G Shock
Weight: 10-12 lb [4.5-5.5 kg]
Warranty: 2 Year No-Hassle
See installation drawings for Warnings and Limitations

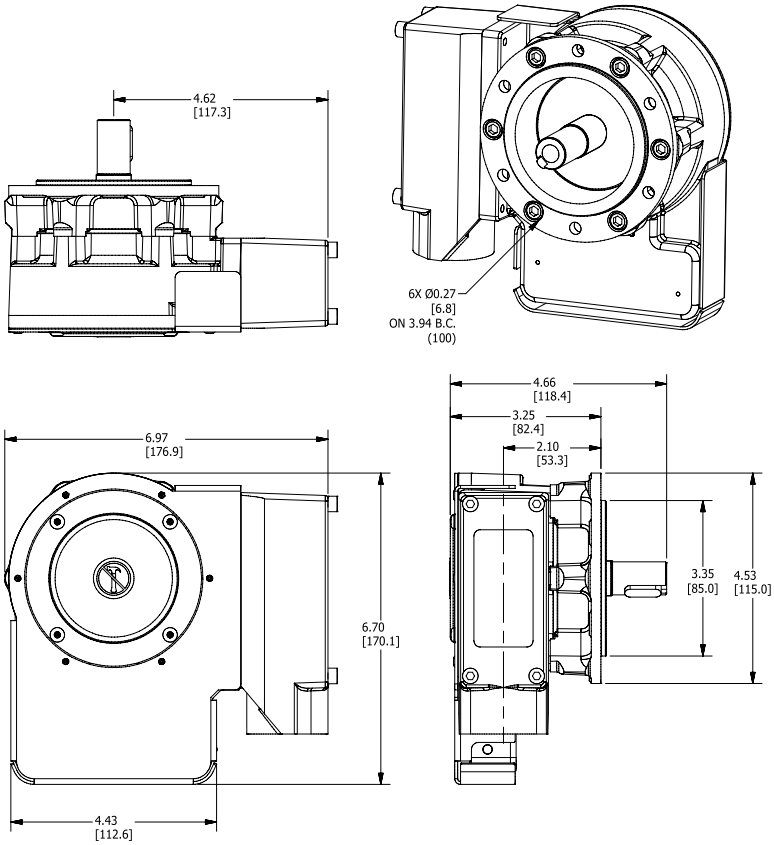

ERMEC
ERMEC, S.L. BARCELONA
C/ Francesc Teixidó, 22
08918 Badalona SPAIN
Tel. +34 902 450 160
info@ermec.com
www.ermec.com
ERMEC, S.L. - MADRID
C/ Puerto Rico, 4
28222 Majadahonda (Madrid) SPAIN
bilbao@ermec.com
portugal@ermec.com

XR4F SELECTION GUIDE

X	R	4	F																

MODEL	SHAFT SIZE	LEFT OUTPUT PPR	RIGHT OUTPUT PPR	LINE DRIVER	CONNECTOR OPTIONS	FOOT MOUNT BRACKET	CHANNELS	SPECIAL OPTIONS
XR4F	**N -** 10mm k6 **H -** 11mm k6 **S -** 16mm h6 **T -** 18mm h6	**XX -** None **AF -** 60 **AK -** 80 **AG -** 100 **AH -** 120 **AA -** 128 **AM -** 200 **AL -** 240 **AN -** 256 **AP -** 300 **AE -** 360 **AC -** 400 **AB -** 480 **AQ -** 500 **AR -** 512 **AS -** 600 **AV -** 900 **AJ -** 960 **AW -** 1000 **AY -** 1024 **AZ -** 1200 **CX -** 1500 **A3 -** 2000 **A4 -** 2048 **A5 -** 2500 **AT -** 3072 **A7 -** 3600 **AD -** 4096 **A8 -** 4800 **A9 -** 5000 **00 -** Special	**XX -** None **AF -** 60 **AK -** 80 **AG -** 100 **AH -** 120 **AA -** 128 **AM -** 200 **AL -** 240 **AN -** 256 **AP -** 300 **AE -** 360 **AC -** 400 **AB -** 480 **AQ -** 500 **AR -** 512 **AS -** 600 **AV -** 900 **AJ -** 960 **AW -** 1000 **AY -** 1024 **AZ -** 1200 **CX -** 1500 **A3 -** 2000 **A4 -** 2048 **A5 -** 2500 **AT -** 3072 **A7 -** 3600 **AD -** 4096 **A8 -** 4800 **A9 -** 5000 **00 -** Special	See Table Below	See Table Below	**X -** None (for B10 flange mount) **1 -** Toshiba TS2113N bolt pattern (recommend "T" 18mm shaft) (B35529 bracket) **2 -** POGxx, OGxx Hubner (Baumer) bolt pattern (B35555 bracket) **3 -** FG4 Johannes Hubner bolt pattern (B35338 bracket) **4 -** Toshiba Type MSP Bolt Pattern	**A -** A,/A, B,/B, Z,/Z **E -** A,B,Z (Single ended)	**000 -** None **001 -** Ceramic Bearings **004 -** Super magnetic shielding **018 -** Add Isolator **9xx -** Special cable length xx=length x 0.3m (use w/Connector Option "W")

	Description	ATE / IECEx Zone 1 & 21	ATEX / IECEx Zone 2 & 22	Class I & II Div. 1 & Zone 0	Class I & II Div. 2 Listed	Class I & II Div. 2 Recognized
	Voltage In / Out	5-7 / 5	5-24 / 5-24	5-7 / 5	5-24 / 5-24	5-24 / 5-24
	Line Driver Code	H	7	F	G	R
Code	**Required Isolator**	**XRB3**	**None**	**XRB3**	**None**	**None**
A	10 Pin MS W/O Plug - Std Phasing	✓	✓	✓		✓
B	10 Pin MS W/O Plug - Dynapar Phasing	✓	✓	✓		✓
C	10 Pin MS W/Plug - Std Phasing	✓	✓	✓		✓
D	10 Pin MS W/Plug - Dynapar Phasing	✓	✓	✓		✓
4	10 Pin MS W/Plug - Large Encodeer Pinout	✓	✓	✓		✓
E	6 Pin MS W/Plug - Std. Pinout	✓	✓	✓		
F	6 Pin MS W/Plug - Dynapar Pinout	✓	✓	✓		
J	7 Pin MS W/Plug - Std. Pinout	✓	✓	✓		✓
K	7 Pin MS W/Plug - Dynapar Pinout	✓	✓	✓		✓
T	8 Pin M12 Global Pinout	✓	✓	✓		
U	8 Pin M12 US Pinout	✓	✓	✓		
2	12 Pin M23 Leine & Linde Pinout	✓	✓	✓		
3	12 Pin M23 Hubner Pinout	✓	✓	✓		
P	Small Industrial Style - Std. Pinout & Plug	✓	✓	✓		
G	Small Industrial Style - Northstar Pinout & Plug	✓	✓	✓		
R	10 Pin mini Twist Lock with Plug	✓	✓	✓		
W	Flexible Cable with Sealing Gland	✓	✓	✓		
H	Conduit Box, Terminal Block & 1/2" NPT	✓	✓	✓	✓	
L	Conduit Box, Terminal Block & 1/2" NPT+Cord	✓	✓	✓		
M	Conduit Box, Terminal Block, 3/4" NPT	✓	✓	✓	✓	
N	Conduit Box, Terminal Block & 1" NPT	✓	✓	✓	✓	
8	Conduit Box, Terminal Block & 25mm	✓	✓	✓	✓	

ERMEC
ERMEC, S.L. BARCELONA
C/ Francesc Teixidó, 22
08918 Badalona SPAIN
Tel. +34 902 450 160
info@ermec.com
www.ermec.com
ERMEC, S.L. - MADRID
C/ Puerto Rico, 4
28222 Majadahonda (Madrid) SPAIN
bilbao@ermec.com
portugal@ermec.com

XR485 SMARTSAFE™ ENCODER -Incremental - Magnetic - Shafted - Hazardous Duty

Certifications:

- ATEX/IECEx Zone 1 & Zone 21 Group IIC
- cULus Class I, Division 1 and Zone 0 Group A,B,C,D
- ATEX/IECEx Zone 2 & 22 Group IIC
- cULus Class I, Division 2 Group A,B,C,D

XR485 SMARTSafe™ solid shaft encoders are a breakthrough in hazardous duty encoders for NEMA C-face and foot mount applications. They are ATEX/IECEx and UL approved and offer incredibly reliable construction! SMARTSafe™ encoders can be used in ATEC/IECEx gas and dust and UL gas hazardous environments. Also available: hollow shaft models (XR45, XR685), Euro shafted models (XR4F), no-bearing modular encoders (XR56, XR85, XR115, XR125, XR850), and modular sensors (XR5, XR12).

For applications requiring ATEX/IECEx Zone 2 or 22 or UL Class I, Division 2, Groups A,B,C,D, use the XR485 directly in your application, with no barrier, isolator or cable gland required.

For applications requiring UL Division 1, ATEX/IECEx Zone 1 or 21 use the XRB3 isolator in your control cabinet which permits the use of intrinsically safe wiring instead of explosion proof conduit or glands. XRB3 Isolator Systems enable use in Class I Div 1 and Zone 0 applications.

Unlike the competition, Avtron SMARTSafe™ encoder systems are fully protected against short circuits, power-to-output wiring, and output-to-ground faults at every point. Wiring errors won't harm this system!

Instead of depending on a tiny optical encoder with weak bearings use XR485. Vibration, shock, liquids, dust and dirt won't harm SMARTSafe™ XR485 encoders! Paint booths, draw works, coil tubing rigs...XR485 can keep them all working 24/7/365.

Eliminate encoder failures in your hazardous environment application-select XR485 today!

SPECIFICATIONS

Operating Power: (add cable drive current as req'd)
Division 1, Zone 1 (XRB3): 12-24 VDC In/Out, Nom. 200 mA
Division 2, Zone 2: 5-24VDC In/Out, 100mA
Output Format: A Quad B with marker (A, /A, B, /B, Z, /Z)
Frequency Range: 0 to 165 KHz
PPR: 8-5000
Speed: 5500 RPM Max. (contact factory for higher speeds)
Maximum Cable Length:
Division 1, Zone 1: 400' [120m]
Division 2, Zone 2: 500' [150m] @ 5-12V; 200' [60m] @ 24V
Temperature: -40°C to 80°C (Storage -40°C to 100°C)
Environmental: Electronics-IP67, IP66 overall (see manual for details)
Vibration: 5-2000 Hz, 18 G; 100 G Shock
Weight: 14 lb [6.4 kg]/16 lb [7.3 kg] dual output
Warranty: 2 Year No-Hassle
See installation drawings for Warnings and Limitations

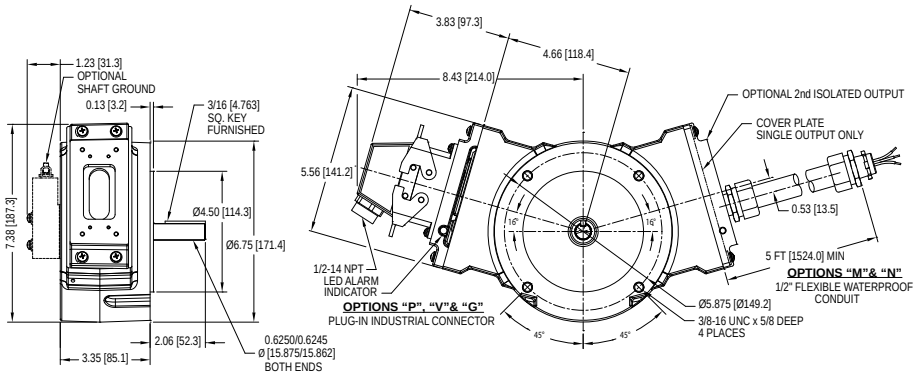

ERMEC
ERMEC, S.L. BARCELONA
C/ Francesc Teixidó, 22
08918 Badalona SPAIN
Tel. +34 902 450 160
info@ermec.com
www.ermec.com
ERMEC, S.L. - MADRID
C/ Puerto Rico, 4
28222 Majadahonda (Madrid) SPAIN
bilbao@ermec.com
portugal@ermec.com

XR485 SELECTION GUIDE

X	R	4	8	5	☐	☐	☐	☐	☐	☐	☐	☐	☐☐☐

MODEL	TEMP RATING	FOOT BRACKET	COVER STYLE	LEFT MODULE		RIGHT MODULE		CONNECTOR OPTIONS	SPECIAL OPTIONS
				LINE DRIVER	PPR	LINE DRIVER	PPR		
XR485	**N -** -20°C to 80°C **C -** -40°C to 80°C	**X -** None **1 -** Std. Avtron Mount **2 -** BC42/46 style (A25448)	**S -** Single shaft **D -** Dual shaft	See Table Below	**X -** None **F -** 60 **G -** 100 **H -** 120 **A -** 128 **L -** 240 **N -** 256 **P -** 300 **E -** 360 **B -** 480 **Q -** 500 **R -** 512 **S -** 600 **V -** 900 **J -** 960 **W -** 1000 **Y -** 1024 **Z -** 1200 **6 -** 1800 **3 -** 2000 **4 -** 2048 **5 -** 2500 **D -** 4096 **8 -** 4800 **9 -** 5000 **0 -** special	See Table Below	**X -** None **F -** 60 **G -** 100 **H -** 120 **A -** 128 **L -** 240 **N -** 256 **P -** 300 **E -** 360 **B -** 480 **Q -** 500 **R -** 512 **S -** 600 **V -** 900 **J -** 960 **W -** 1000 **Y -** 1024 **Z -** 1200 **6 -** 1800 **3 -** 2000 **4 -** 2048 **5 -** 2500 **D -** 4096 **8 -** 4800 **9 -** 5000 **0 -** special	See Table Below	**000 -** None **4XX -** Select alternate PPR assignment code **005 -** Krytox bearings **018 -** Add isolator **9XX -** Special cable length **004 -** Super magnetic shielding

	Description	ATE / IECEx Zone 1 & 21	ATEX / IECEx Zone 2 & 22	Class I & II Div. 1 & Zone 0	Class I & II Div. 2 Listed	Class I & II Div. 2 Recognized
	Voltage In / Out	5-7 / 5	5-24 / 5-24	5-7 / 5	5-24 / 5-24	5-24 / 5-24
	Line Driver Code	H	7	F	G	R
Code	**Required Isolator**	**XRB3**	**None**	**XRB3**	**None**	**None**
A	10 Pin MS W/O Plug - Std Phasing	✓	✓	✓		✓
B	10 Pin MS W/O Plug - Dynapar Phasing	✓	✓	✓		✓
E	7 Pin MS W/Plug A-quad-B - Std. Phasing	✓	✓	✓		✓
F	7 Pin MS W/Plug A, A\ - Std. Phasing	✓	✓	✓		✓
J	7 Pin MS W/Plug A, B, Z - Std. Phasing	✓	✓	✓		✓
K	7 Pin MS W/Plug A, A\, B,B\ - Std. Phasing	✓	✓	✓		✓
S	7 Pin MS W/Plug A-quad-B - Dynapar Phasing	✓	✓	✓		✓
T	7 Pin MS W/Plug A, A\ - Dynapar Phasing	✓	✓	✓		✓
U	7 Pin MS W/Plug A, B, Z - Dynapar Phasing	✓	✓	✓		✓
V	7 Pin MS W/Plug A, A\, B,B\ - Dynapar Phasing	✓	✓	✓		✓
P	Large Industrial Style - Std. Pinout & Plug	✓	✓	✓		
G	Large Industrial Style - Northstar Pinout & Plug	✓	✓	✓		
R	10 Pin mini Twist Lock with Plug	✓	✓	✓		
W	Flexible Cable with Sealing Gland	✓	✓	✓		
4	Conduit Box, Terminal Block & 1/2" NPT	✓	✓	✓	✓	
5	Conduit Box, Terminal Block, 3/4" NPT+Chord	✓	✓	✓	✓	
6	Conduit Box, Terminal Block & 1" NPT	✓	✓	✓	✓	
7	Conduit Box, Terminal Block & 25mm	✓	✓	✓	✓	

ERMEC, S.L. BARCELONA
C/ Francesc Teixidó, 22
08918 Badalona SPAIN
Tel. +34 902 450 160
info@ermec.com
www.ermec.com
ERMEC, S.L. - MADRID
C/ Puerto Rico, 4
28222 Majadahonda (Madrid) SPAIN
bilbao@ermec.com
portugal@ermec.com

XR5 & XR12 SMARTSAFE™ SENSOR -Incremental - Magnetic - Sensor - Hazardous Duty

Certifications:

- ATEX/IECEx Zone 1 & Zone 21 Group IIC
- cULus Class I, Division 1 and Zone 0 Group A,B,C,D
- ATEX/IECEx Zone 2 & 22 Group IIC
- cULus Class I, Division 2 Group A,B,C,D

SPECIFICATIONS

Operating Power: (add cable drive current as req'd)
Division 1, Zone 1 (XRB3): 12-24 VDC in/out, Nom. 200 mA
Division 2, Zone 2: 5-24VDC in/out, 150 mA
Output Format: A Quad B with marker (A, /A, B, /B, Z, /Z)
Frequency Range: 0 to 165 KHz
Maximum Cable Length:
Division 1, Zone 1: Encoder 500' Isolator 1000'
Division 2, Zone 2 (5 to 12 VDC in): 500'
Division 2, Zone 2 (15 to 24 VDC in): 250'
Rotor Positioning: Up to +/-0.100" [+/-2.54 mm] movement/misalignment
Temperature: -40°C to 80°C (Storage -40°C to 100°C)
Vibration: 5-2000 Hz, 18 G; 100 G Shock
Weight: 2.2 lb [1 kg]
Warranty: 2 Year No-Hassle
See installation drawings for Warnings and Limitations

XR12 SMARTSafe™ modular incremental quadrature encoder sensors enable the world's first hazardous duty rotary encoders with removable electronics. They are cULus, ATEX and IECEx certified and offer incredibly reliable no-bearing construction! SMARTSafe™ sensors can be used in ATEX/IECEx gas and dust and UL gas hazardous environments. Also available: hollow shaft models (XR685), shafted models (XR485), no-bearing modular encoders (XR125, XR850), and modular sensors for smaller bore applications (XR5).

For applications requiring ATEX/IECEx Zone 2 or 22 or cULus Class I, Division 2, Groups A,B,C,D use the XR12 directly in your application, with no barrier, isolator or cable gland required.

For applications requiring UL Division 1, ATEX/IECEx Zone 1 or 21 protection use the XRB3 isolator in your control cabinet which permits the use of intrinsically safe wiring instead of explosion-proof conduit or glands. The XR56 can also be used in UL Class I Div 1 & Zone 0 applications using the XRB3 Isolator.

Unlike the competition, Avtron SMARTSafe™ encoder systems are protected against short circuits, power-to-output wiring, and output-to-ground faults.

Instead of mounting a tiny optical encoder with weak bearings on a wobbling stub shaft, mount XR12 directly on your machine and install the rotor on your main application or motor shaft. Vibration, shock, liquids, dust and dirt won't harm SMARTSafe™ XR12 encoders! Paint booths, draw works, coil tubing rigs...XR12 can keep them all working 24/7/365.

Eliminate the biggest cause of industrial encoder failure--eliminate the bearings with XR12 hazardous duty encoder sensors.

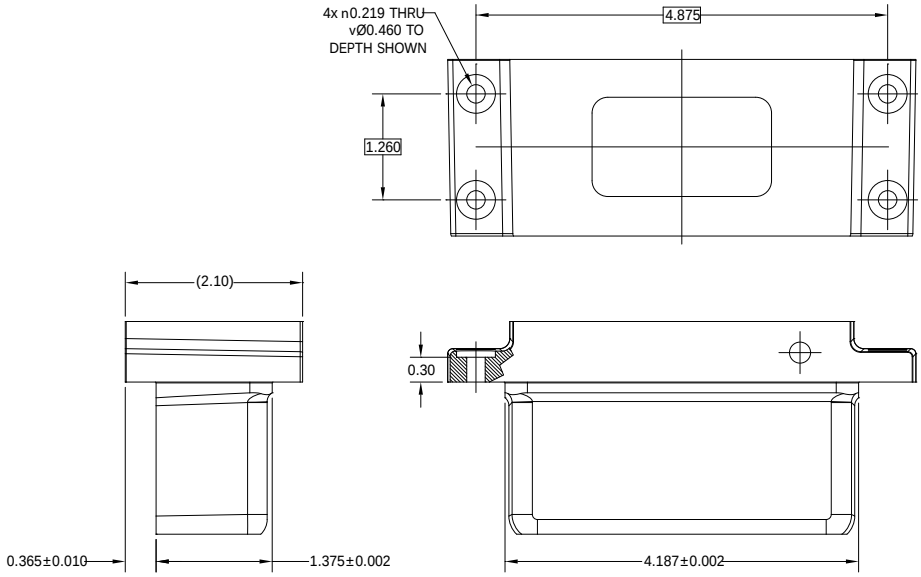

ERMEC
ERMEC, S.L. BARCELONA
C/ Francesc Teixidó, 22
08918 Badalona SPAIN
Tel. +34 902 450 160
info@ermec.com
www.ermec.com
ERMEC, S.L. - MADRID
C/ Puerto Rico, 4
28222 Majadahonda (Madrid) SPAIN
bilbao@ermec.com
portugal@ermec.com

XR5 & XR12 SMARTSAFE™ SENSOR SELECTION GUIDE

MODEL	LINE DRIVER	PPR	CONNECTOR OPTIONS	SPECIAL OPTIONS
XR5- or XR12-	See Table Below	**X -** None **F -** 60 **C -** 64 **G -** 100 **H -** 120 **A -** 128 **L -** 240 **N -** 256 **P -** 300 **E -** 360 **B -** 480 **Q -** 500 **R -** 512 **S -** 600 **U -** 720 **V -** 900 **J -** 960 **Y -** 1024 **Z -** 1200 **6 -** 1800 **3 -** 2000 **4 -** 2048 **5 -** 2500 **D -** 4096 **8 -** 4800 **9 -** 5000 **0 -** Special	See Table Below	**000 -** None **004 -** Super Magnetic Shielding **018 -** Includes isolator **4xx -** Special PPR **9xx -** Special Cable Length (xx=ff/0.3m)

	Description	ATE / IECEx Zone 1 & 21	ATEX / IECEx Zone 2 & 22	Class I & II Div. 1 & Zone 0	Class I & II Div. 2 Listed	Class I & II Div. 2 Recognized
	Voltage In / Out	5-7 / 5	5-24 / 5-24	5-7 / 5	5-24 / 5-24	5-24 / 5-24
	Line Driver Code	H	7	F	G	R
Code	**Required Isolator**	**XRB3**	**None**	**XRB3**	**None**	**None**
A	10 Pin MS W/O Plug - Std Phasing	✓	✓	✓		✓
B	10 Pin MS W/O Plug - Dynapar Phasing	✓	✓	✓		✓
E	7 Pin MS W/Plug A-quad-B - Std. Phasing	✓	✓	✓		✓
F	7 Pin MS W/Plug A, A\ - Std. Phasing	✓	✓	✓		✓
J	7 Pin MS W/Plug A, B, Z - Std. Phasing	✓	✓	✓		✓
K	7 Pin MS W/Plug A, A\, B,B\ - Std. Phasing	✓	✓	✓		✓
S	7 Pin MS W/Plug A-quad-B - Dynapar Phasing	✓	✓	✓		✓
T	7 Pin MS W/Plug A, A\ - Dynapar Phasing	✓	✓	✓		✓
U	7 Pin MS W/Plug A, B, Z - Dynapar Phasing	✓	✓	✓		✓
V	7 Pin MS W/Plug A, A\, B,B\ - Dynapar Phasing	✓	✓	✓		✓
P	Large Industrial Style - Std. Pinout & Plug	✓	✓	✓		
G	Large Industrial Style - Northstar Pinout & Plug	✓	✓	✓		
R	10 Pin mini Twist Lock with Plug	✓	✓	✓		
W	Flexible Cable with Sealing Gland	✓	✓	✓		
2	Conduit Box (Tall), Terminal Block & 3/4" NPT	✓	✓	✓	✓	
4	Conduit Box, Terminal Block & 1/2" NPT	✓	✓	✓	✓	
5	Conduit Box, Terminal Block, 3/4" NPT+Cord	✓	✓	✓	✓	
6	Conduit Box, Terminal Block & 1" NPT	✓	✓	✓	✓	
7	Conduit Box, Terminal Block & 25mm	✓	✓	✓	✓	

ERMEC, S.L. BARCELONA
C/ Francesc Teixidó, 22
08918 Badalona SPAIN
Tel. +34 902 450 160
info@ermec.com
www.ermec.com
ERMEC, S.L. - MADRID
C/ Puerto Rico, 4
28222 Majadahonda (Madrid) SPAIN
bilbao@ermec.com
portugal@ermec.com

XP5 SMARTSAFE™ SENSOR -Incremental - Magnetic - Sensor - Hazardous Duty

Certifications:

- Class I Div 1, Groups C and D
- Class I Zone 1, Ex db ia IIB T4 Gb
- Class I Zone 1, AEx db ia IIB T4 Gb
- Ex db ia IIB T4 Gb (ATEX/IECEx)

XP5 SMARTSafe™ sensors power the world's first explosion-proof encoder with removable electronics and no external barrier!
They are cULus, ATEX, AEx & IECEx certified and offer incredibly reliable no-bearing construction!
SMARTSafe™ XP5 sensors can be used in ATEX/IECEx, cUL, AEX, and UL gas hazardous environments.
Also available: no-bearing modular encoders (XPH8), as well as intrinsically safe models (XR5, XR12, XR56, XR125, XR485, XR685, XR850), and hollow shaft models (M6C).

For applications requiring ATEX/IECEx Zone 1 or cULus Class I, Division 1, Groups C & D use the XP5 directly in your application with no barrier or isolator required.

Unlike the competition, Avtron SMARTSafe™ encoder systems are protected against short circuits, power-to-output wiring, and output-to-ground faults.
XP5 features full diagnostics: it's easy to determine that signal quality is good, and that there are no wiring short-circuits.

Instead of mounting a tiny optical encoder with weak bearings on a wobbling stub shaft mount XP5 directly on your machine and install the rotor on your main application shaft. Top drives, draw works, coil tubing, paint lines...so many applications benefit from a more reliable no-bearing encoder. Vibration, shock, liquids, dust and dirt won't harm SMARTSafe™ XP5 encoders!

Eliminate the biggest cause of hazardous duty encoder failure--eliminate the bearings with XP5 hazardous duty encoder sensors.

SPECIFICATIONS

Operating Power:
400mA max @ 5V; 200mA max @ 12V; 100mA max @ 24V (plus cable load)
Output Format: A Quad B with marker (A, /A, B, /B, Z, /Z)
Frequency Range: 0 to 250 KHz
PPR: 8-100000
Speed: 6000 RPM Max. (contact factory for higher speeds)
Maximum Cable Length: 1000 ft (305 m) (contact factory for longer distances)
Axial Rotor Positioning: Up to +/-0.100" [+/-2.54 mm] movement/misalignment
Sensor-Rotor Gap: 0.040", +0.015/-0.030" [1.14 mm+0.38/-0.76]
Temperature: -50°C to 85°C (rotor -50°C to 100°C continuous, +135°C intermittent)
Environmental: IP65
Vibration: 5-2000 Hz, 18 G; 100 G Shock
Weight: 4.6 lb [2.1 kg] (no rotor)
Warranty: 2 Year No-Hassle
See installation drawings for Warnings and Limitations

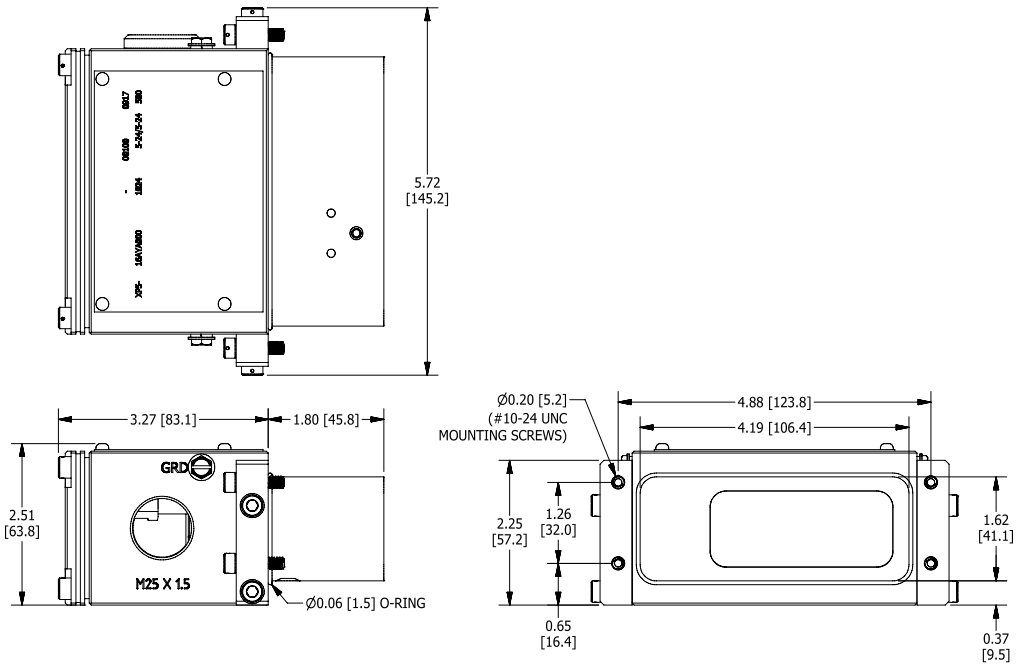

ERMEC
ERMEC, S.L. BARCELONA
C/ Francesc Teixidó, 22
08918 Badalona SPAIN
Tel. +34 902 450 160
info@ermec.com
www.ermec.com
ERMEC, S.L. - MADRID
C/ Puerto Rico, 4
28222 Majadahonda (Madrid) SPAIN
bilbao@ermec.com
portugal@ermec.com

XP5 SMARTSAFE™ SENSOR SELECTION GUIDE

X	P	5	-									

MODEL	STYLE ROTOR COMPATIBILITY	LINE DRIVER	PPR	Connection Options Terminal Box	SPECIAL OPTIONS
XP5-	**1 -** With Bottom Mount Bracket for XPH1 64mm Rotor **2 -** With Side Mount Bracket compatible with 222mm Rotor **8 -** With Side Mount Bracket compatible with 143mm Rotor, XPH8	**8 -** Hi Power 5-24V in/ 5-24V out (Hx)	**BC -** 50 **AF -** 60 **AK -** 80 **AG -** 100 **AH -** 120 **AA -** 128 **AM -** 200 **AL -** 240 **AN -** 256 **AP -** 300 **AE -** 360 **AC -** 400 **AB -** 480 **AQ -** 500 **AR -** 512 **AS -** 600 **AU -** 720 **AV -** 900 **AJ -** 960 **AW -** 1000 **AY -** 1024 **AZ -** 1200 **CX -** 1500 **A3 -** 2000 **A4 -** 2048 **A5 -** 2500 **AT -** 3072 **A7 -** 3600 **AD -** 4096 **A8 -** 4800 **A9 -** 5000 **A0 -** Special	**A -** M25 thread on left exit, blanking plug installed on right side, A leads B with CW rotation **B -** M25 thread on right exit, blanking plug installed on left side, A leads B with CW rotation Left-Right orientation are viewed with terminal box facing up	**000 -** None **004 -** Super Magnetic Shielding

ERMEC, S.L. BARCELONA
C/ Francesc Teixidó, 22
08918 Badalona SPAIN
Tel. +34 902 450 160
info@ermec.com
www.ermec.com
ERMEC, S.L. - MADRID
C/ Puerto Rico, 4
28222 Majadahonda (Madrid) SPAIN
bilbao@ermec.com
portugal@ermec.com

XRB3 INTRINSIC SAFETY ISOLATOR -Incremental - Isolator - Hazardous Duty

SPECIFICATIONS

Operating Power:
12-24VDC, nom. 200mA (w/SMARTSafe™ encoder); max 440mA
Output Voltage: 12-24 V, nom.
Output Format: Incremental A Quad B with marker (A, /A, B, /B, Z, /Z quadrature)
Frequency Range: 0 to 165 KHz
Maximum Cable Length: 1000' [300 m] XRB3 to control; 500' [152 m] XRB3 to encoder
Temperature: -40°C to 80°C (Storage -40°C to 100°C)
Environmental: IP54, cabinet mount
Vibration: 5-2000 Hz, 18 G
Weight: 1.1 lb [0.5 kg]
Warranty: 2 Year No-Hassle

Certifications:

D53007: US and Canada
Class I Division 1 Groups A, B, C or D
Class I Zone 0 AEx ia IIC T4
Class I Zone 0 Ex ia IIC T4X

D53008: ATEX and IECEx
Group II Category 2 Zone 1 Gas Group IIC
Group II Category 2 Zone 21 Dust Group IIIC

XRB3 intrinsic safety isolators are the key to providing complete protection including: (cULus Class I, Div 1; Class I, Zone 0, ATEX Zone 1 & 21 "ia"; and IECEx Zone 1 & 21 "ia") for SMARTSafe™ incremental encoders with quadrature output.

The XRB3 ensures the SMARTSafe™ encoder system meets hazardous duty UL and CSA, ATEX & IECEx safety standards. Also available: A full range of SMARTSafe™ rotary encoders to meet your application needs, including the heavy duty hollow shaft (XR45), shafted models (XR4F, XR485), and no-bearing modular encoders (XR56, XR85, XR115, XR125, XR850), and stand-alone sensors (XR5, XR12).

Unlike the competition, the Avtron SMARTSafe™ encoder systems including the XRB3 are fully protected against short circuits, power-to-output wiring, and output-to-ground faults at every point. Wiring errors won't harm this system!

Competitive intrinsic safety barriers for encoders often limit the available frequency throughput, or have undesirable voltage droop under load that limit cable length severely. The XRB3 has full throughput for Avtron quadrature encoders even at high PPRs, and the XRB3 allows the use of maximum cable lengths through its innovative stable-voltage design.

Select an Avtron SMARTSafe rotary encoder to eliminate encoder problems, and include the XRB3 as part of the system to meet UL and CSA system safety standards in your hazardous duty application!

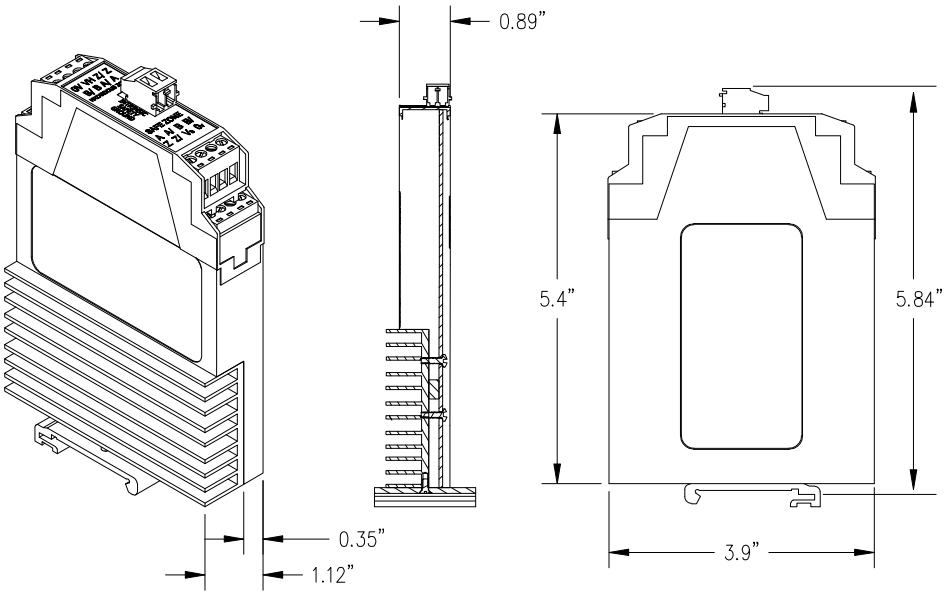

ERMEC
ERMEC, S.L. BARCELONA
C/ Francesc Teixidó, 22
08918 Badalona SPAIN
Tel. +34 902 450 160
info@ermec.com
www.ermec.com
ERMEC, S.L. - MADRID
C/ Puerto Rico, 4
28222 Majadahonda (Madrid) SPAIN
bilbao@ermec.com
portugal@ermec.com

ENCODER CABLES

CABLE FEATURES

Nidec offers a full range of cables to save site assembly time and eliminate wiring errors.

Standard lengths (yyy.y): 000.5, 001.0, 002.0, 005.0, 010.0, 020.0, 030.0 (meters)
For absolute encoders, longer lengths are also available, depending on the bus system.

For applications that operate between -30ºC to 80ºC, customers can select our ultra-low capacitance cable, which offers superior noise performance through the use of twisted pair wires and a braided foil shield. This cable also has 18 Ga power conductors to minimize any power supply loss.

For applications above 80ºC, please select our standard, high-temp cable option.

Please see our web-based configurator for all available cable and connector options.

ABSOLUTE ENCODERS						
Encoder Models	**Bus**	**Purpose**	**Conn Code**	**Conn #1**	**Conn #2**	**Part Number**
AV6A, AV6M, HS6A, HS6M, AV30, HS40	Analog	Sig+Pwr	A	M12/5	none	CBL1AAC1XPWyyy.y
	DeviceNet	Bus In+Pwr	A, B, C	M12/5	none	CBL1DAC1XPWyyy.y
		Daisy Chain	B, C	M12/5	M12/5	CBL1DAC2XPDyyy.y
		Bus Out+Pwr	B, C	M12/5	none	CBL1DAC2XPWyyy.y
	CANOpen	Bus In+Pwr	A, B, C	M12/5	none	CBL1CAC1XPWyyy.y
	CANSafe	Daisy Chain	B, C	M12/5	M12/5	CBL1CAC2XPDyyy.y
		Bus Out+Pwr	B, C	M12/5	none	CBL1CAC2XPWyyy.y
	Profibus	Bus In	C	M12/5	none	CBL1PAC1XPWyyy.y
		Bus Out	C	M12/5	none	CBL1PAC2XPWyyy.y
		Daisy Chain	C	M12/5	M12/5	CBL1PAC2XPDyyy.y
		Pwr	C	M12/4	none	CBL1PAC3XPWyyy.y
	SSI	Sig+Pwr	E	M12/8	none	CBL1SAE1XPWyyy.y
		Sig+Pwr	F	M23/12	none	CBL1SAF1XPWyyy.y
AV6A, HS6A	Parallel	Sig+Pwr	G	M27/26	none	CBL1LAG1XPWyyy.y
	Ethernet	Bus In	C, D	M12/4	none	CBL1EAC1XTWyyy.y
	EtherNet/IP	Bus Out	C	M12/4	none	CBL1EAC2XPWyyy.y
	PROFINET	Daisy Chain	C	M12/4	M12/4	CBL1EAC2XPDyyy.y
	Modbus TCP	Pwr	C, D	M12/4	none	CBL1EAC3XTWyyy.y
INCREMENTAL ENCODERS						
Encoder Models	**Bus**	**Purpose**	**Conn Code**	**Conn #1**	**Conn #2**	**Part Number**
HS4, HS25A, HS35A, HS35M, AV32, HS44, HS45, AV56, AV67, AV85, AV115, AV4, AV20, AV25, AV44, AV45,	Incremental	Sig+Pwr	A, B, C, D	MS10	none	CBL1BBA1XPWyyy.y
			E, F (ph:B)	MS6	none	CBL1BBE1XPWyyy.y
			E, F (ph:E,F)	MS6	none	CBL1BCE1XPWyyy.y
			J, K, M,N (ph:B)	MS7	none	CBL1BBJ1XPWyyy.y
			J, K, M,N (ph:E,F)	MS7	none	CBL1BCJ1XPWyyy.y
			R, S	TW10	none	CBL1BBR1XPWyyy.y
			T	M12/8	none	CBL1BBT1XPWyyy.y
AV45, AV56, AV67, AV85, AV115, M3, M4, HS45	Incremental	Sig+Pwr	G, P, Q, V, Z	Ind'l (sm)	none	CBL1BBP1XPWyyy.y
AV125, AV485, AV685, AV850	Incremental	Sig+Pwr	G, P, Q, V, Z	Ind'l (lge)	none	CBL1BCP1XPWyyy.y
			A, B, C, D	MS10	none	CBL1BB41XPWyyy.y
Cable <30m	Incremental	Sig+Pwr	Any	none	none	CBL1BBW1XPWyyy.y
Cable >30m	Incremental	Sig+Pwr	Any	none	none	CBL1BCW1XPWyyy.y

ERMEC
ERMEC, S.L. BARCELONA
C/ Francesc Teixidó, 22
08918 Badalona SPAIN
Tel. +34 902 450 160
info@ermec.com
www.ermec.com
ERMEC, S.L. - MADRID
C/ Puerto Rico, 4
28222 Majadahonda (Madrid) SPAIN
bilbao@ermec.com
portugal@ermec.com

UPGRADES AND RETROFITS

COMPETITIVE MODELS

Nidec offers 100% compatible versions to replace competitors' models. Enjoy the superior durability of Avtron Encoders with no wiring changes!

www.avtronencoders.com has a conversion assistant to help you convert model numbers.

Note that for some models such as HS35, Nidec offers "good" (HS35A), "better" (HS35M), and"best"(HS45) drop-in replacements!

ANALOG RETROFITS

Nidec's retrofit solutions directly replace obsolete tachogenerators such as GE 5PY, 5BC42, 5BC46, & 5BC66 with durable magnetic encoders and signal converters, without any drive changes.

Enjoy the benefits of more-linear and more-reliable operation, combined with widely interchangable spare parts. See our website for more details.

Model AV485 with footmount, AV850, K661, AV485.

FROM THIS

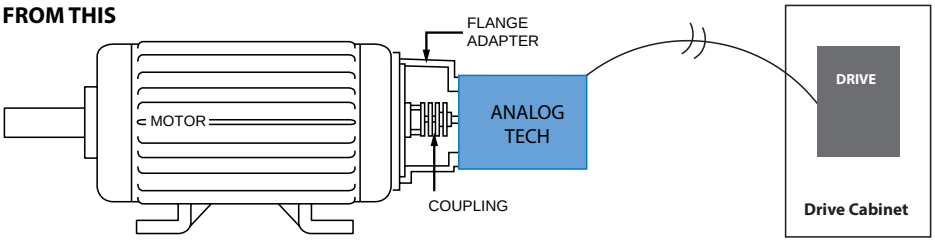

TO THIS UPGRADE (BETTER)

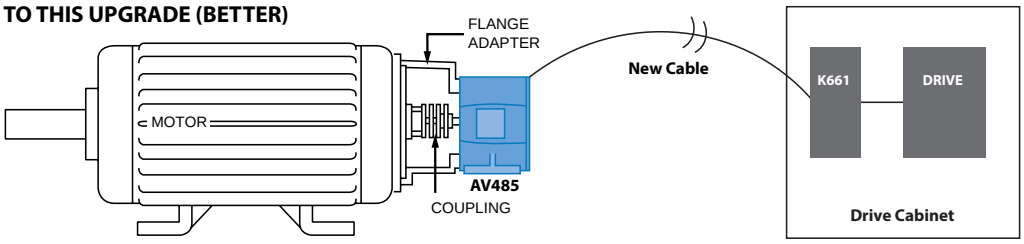

OR THIS UPGRADE (BEST)

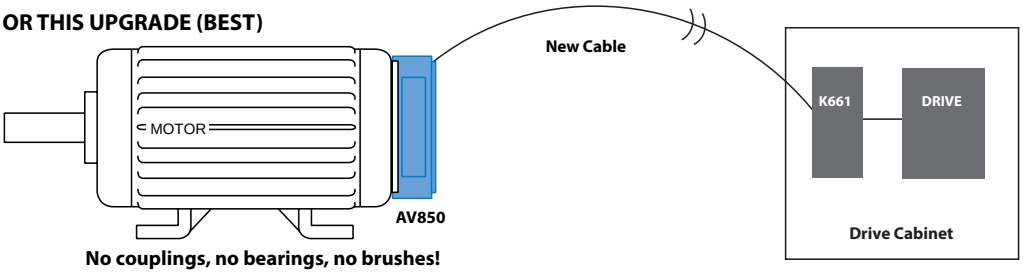

No couplings, no bearings, no brushes!

ERMEC, S.L. BARCELONA
C/ Francesc Teixidó, 22
08918 Badalona SPAIN
Tel. +34 902 450 160
info@ermec.com
www.ermec.com
ERMEC, S.L. - MADRID
C/ Puerto Rico, 4
28222 Majadahonda (Madrid) SPAIN
bilbao@ermec.com
portugal@ermec.com

OUTPUT SPECIFICATIONS

OUTPUT DESCRIPTION

Most incremental Avtron Encoders have a two square wave output: A Quad B (A, B) 90° out of phase, with complements (/A, /B). Marker pulses (Z) are available on most units.

OUTPUT WAVEFORMS

A Quad B: Two Square Waves
90° out of Phase
with Complements

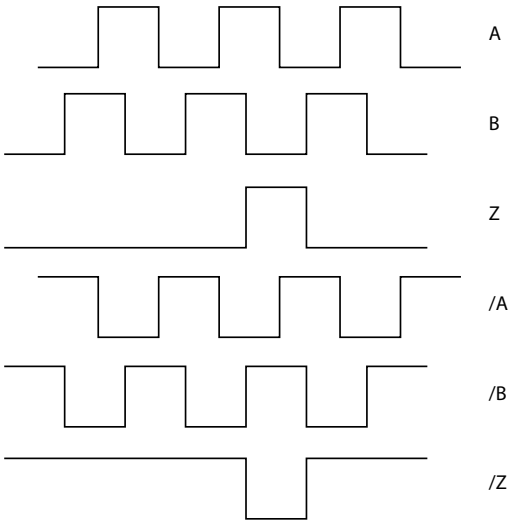

Direction Sensing
Zero Speed
Marker Pulse

ADVANCED DIAGNOSTICS

Many Avtron Encoders feature our self-diagnostic system. The microprocessor-based system continuously monitors the output of the encoder for signal quality. A red/orange/green LED and an alarm contact indicate if the signal is nearing specification limits. Operators can replace the removable sensor module or correct mechanical issues before an actual failure occurs.

SMARTach™ III Diagnostic LED (AV850 shown)

OUTPUT CHART A		VOLTAGE INPUT	PROTECTION	MAXIMUM CABLE DRIVE
AV4, HS4	1	5-30 VDC	Short Circuit	500 ft @ 5V, 200 ft @ 12 V, 100 ft @ 24V
	4	5-30 VDC (5V out)		500ft
	6*	5-24 VDC		1000 ft @ 5V, 500 ft @ 12 V, 200 ft @ 24V
*Only available on AV4				
OUTPUT CHART B		**VOLTAGE INPUT**	**PROTECTION**	**MAXIMUM CABLE DRIVE**
AV20, AV25, HS25A, HS35A	1	5-28 VDC	Reverse Voltage, Transient, Short Circuit	1000 ft @ 5V, 500 ft @ 12 V, 200 ft @ 24V
	2	5-28 VDC Open Collector		500 ft
	3*	5-15 VDC		1000 ft
	4	5-28 VDC (5V out)		500 ft
*Only available on AV25				
OUTPUT CHART C		**VOLTAGE INPUT**	**PROTECTION**	**MAXIMUM CABLE DRIVE**
M3, M4, M6C, M7	1	5-24 VDC	Reverse Voltage, Transient, Short Circuit	1000 ft @ 5V, 500 ft @ 12 V, 200 ft @ 24V
	2*	5-18 VDC	Reverse Voltage, Transient	2000 ft
	3*	12-24 VDC	Reverse Voltage, Transient, Short Circuit (Low)	1000 ft
	4**	5-24 VDC	Reverse Voltage, Transient, Short Circuit	
	8***	6.5-24 VDC	Reverse Voltage, Enhanced Transient, Enhanced Short Circuit	
*M3, M4, M7 only **M3, M4 only ***M6C only				
OUTPUT CHART D		**VOLTAGE INPUT**	**PROTECTION**	**MAXIMUM CABLE DRIVE**
AV32	N/A	5-24 VDC	Reverse Voltage, Transient, Short Circuit	1000 ft @ 5V, 500 ft @ 12 V, 200 ft @ 24V
	H00	5-24 VDC		1000 ft
OUTPUT CHART E		**VOLTAGE INPUT**	**PROTECTION**	**MAXIMUM CABLE DRIVE**
HS44	1	6-30 VDC	Reverse Voltage, Transient, Short Circuit	1000 ft
	2	6-30 VDC (5V out)		
	3	5V In/Out		
OUTPUT CHART F		**VOLTAGE INPUT**	**PROTECTION**	**MAXIMUM CABLE DRIVE**
AV45, AV56, AV56S, AV67, AV85, AV115, AV125, AV485, AV685, AV850, HS35M, HS45	6	5-24 VDC	Reverse Voltage, Enhanced Transient, Enhanced Short Circuit	1000 ft @ 5V, 500 ft @ 12 V, 250 ft @ 24V
	8	5-24 VDC Hi-Power		1000 ft
	9	5-28 VDC		
OUTPUT CHART G		**VOLTAGE INPUT**	**PROTECTION**	**MAXIMUM CABLE DRIVE**
XR4F, XR45, XR56, XR85, XR115, XR125, XR485, XR685, XR850	F, H	Level 1 (12-24 VDC)	Reverse Voltage, Transient, Short Circuit	500 ft
	G, 7	Level 2 (5-24 VDC)		500 ft @ 5V, 500 ft @ 12 V, 200 ft @ 24V
OUTPUT CHART H		**VOLTAGE INPUT**	**PROTECTION**	**MAXIMUM CABLE DRIVE**
XPH1, XPH8, XP5	8	5-24 VDC	Reverse Voltage, Enhanced Transient, Enhanced Short Circuit	1000 ft
OUTPUT CHART I		**VOLTAGE INPUT**	**PROTECTION**	**MAXIMUM CABLE DRIVE**
XRB3	N/A	12-24 VDC	Reverse Voltage, Enhanced Transient, Enhanced Short Circuit	1000 ft

ERMEC
ERMEC, S.L. BARCELONA
C/ Francesc Teixidó, 22
08918 Badalona SPAIN
Tel. +34 902 450 160
info@ermec.com
www.ermec.com
ERMEC, S.L. - MADRID
C/ Puerto Rico, 4
28222 Majadahonda (Madrid) SPAIN
bilbao@ermec.com
portugal@ermec.com

ENCODER PRODUCT COMPARISON

	Non-Hazardous Application Models and Options					Hazardous Duty Applications				
Enclosure	Mounting Style	Model	Temperature Range	Grounding Brush	Overspeed Switch	Intrinsically Safe Model	Temperature Range	Explosion Proof Model	Temperature Range	UL Cl /Div
Severe Mill Duty	Modular Sensor	AV5	-40C...+120C++	-	√	XR5	-40C...+80C	XP5	-50C...+80C	√
	Modular Sensor	AV12	-40C...+120C++	-	√	XR12	-40C...+80C			√
	Face or Foot	AV30	-30C...+85C	-	-					
	56C Face or Foot	AV485	-40C...+120C++	√	√	XR485	-40C...+80C			√
	Hollow Shaft	HS40	-30C...+85C	-	-					
	Hollow Shaft	AV685	-40C...+120C++	√	√	XR685	-40C...+80C			√
Heavy Mill Duty	B10 or PY Face	AV44	-40C…+100C	√	√					
	B10 Face or Foot	AV45	-40C...+100C	-	√	XR4F	-40C...+80C			√
	Modular 4.5”	AV56	-40C...+100C	-	√	XR56	-40C...+80C			√
	Modular 4.5”	AV56S	-40C...+100C	-	√					
	Modular 6.75”	AV67	-40C...+100C	-	√					
	Modular 8.5”	AV85	-40C...+100C	-	√	XR85	-40C...+80C			√
	Modular 115mm	AV115	-40C...+100C	-	√	XR115	-40C...+80C			√
	Modular 12.5”	AV125	-40C...+100C	-	√	XR125	-40C...+80C			√
	Modular 8.5”	AV850	-40C...+100C	-	√	XR850	-40C...+80C	XPH8	-50C...+85C	√
	Hollow Shaft	HS44	-40C…+100C	√	√					
	Hollow Shaft	HS45	-40C...+100C	-	√	XR45	-40C...+80C			√
	Hollow Shaft	M4	-40C...+85C	√	-					
	Hollow Shaft	M7	-45C...+80C	-	-			M6C	-40C...+80C	-
Mill Duty	Modular Auto-Center	AV32	-40C...+100C	-	-					
	Hollow Shaft	HS35M	-20C...+85C	-	-					
	Hollow Shaft	M3	-40C...+85C	√	√					
Light Mill Duty	Face or Foot	AV4	-40C...+85C	-	-					
	Hollow Shaft	HS4	-40C...+85C	-	-					
	Face or Foot	AV6A	-40C...+85C	-	-					
	Face or Foot	AV6M	-40C...+85C	-	-					
	Face or Foot	AV20	-40C...+100C	-	-					
	Face or Foot	AV25	-40C...+100C	-	-					
	Hollow Shaft	HS6A	-40C...+85C	-	-					
	Hollow Shaft	HS6M	-30C...+85C	-	-					
	Hollow Shaft	HS25A	-20C...+100C	-	-					
	Hollow Shaft	HS35A	-20C...+100C	-	-					

** 3600 RPM max. for bore > 2” [52mm].

^ Analog position signals of resolver are converted to digital signals by external analog-to-digital board not provided by Nidec.

\+ 6000 RPM multi-turn, 12000 RPM single-turn

++ 120°C rating requires external cooling air supply

All values may vary, please consult factory or website.

Magnetic

Optical

ERMEC, S.L. BARCELONA
C/ Francesc Teixidó, 22
08918 Badalona SPAIN
Tel. +34 902 450 160
info@ermec.com
www.ermec.com
ERMEC, S.L. - MADRID
C/ Puerto Rico, 4
28222 Majadahonda (Madrid) SPAIN
bilbao@ermec.com
portugal@ermec.com

		All Application Options (Hazardous and Non-Hazardous)										
Certifications		Sensing	Shaft or Bore Size		Pulses Per Revolution (PPR)	Max Turn Count	Max Speed RPM	Max Freq kHz	Max Outputs	Thru Shaft	Replaceable Sensors	Diagnostics
UL CI /Zone	ATEX		US	Metric								
√	√		5/8” - 4 1/2”	16mm-115mm	4-100000	1	6000	250kHz	1	√	√	√
√	√		1 3/8” - 7 7/8”	25-200mm	4-50000	1	6000	250kHz	1	√	√	√
			3/8”, 5/8”	6-18mm	8192	1-32768	5000	NA	1	-	-	√
√	√		5/8”	15.88mm	4-50000	1	5000	250kHz	2	√	√	√
			5/8”- 1 1/8”	16-30mm	8192	1-32768	5000	NA	1	-	-	√
√	√		1 1/8”	28.58mm	4-50000	1	5400	250kHz	2	√	√	√
			5/16”	11mm	1-10000	1	6000	250kHz	2	-	-	√
√	√		5/16” - 11/16”	9-18mm	8-5000	1	5000	165kHz	2	-	-	√
√	√		1/2” - 3 3/16”	10-85mm	4-5000	1	5400	250kHz	2	√	-	√
			1/2” - 3 3/16”	10-85mm	4-5000	1	5400	250kHz	1	√	-	√
			1/2” - 3 3/16”	10-85mm	4-5000	1	5400	250kHz	1	√	-	√
√	√		1/2” - 3 3/16”	10-85mm	4-5000	1	5400	250kHz	2	√	-	√
√	√		1/2” - 3 3/16”	10-85mm	4-5000	1	5400	250kHz	2	√	-	√
√	√		1 3/8” - 7 7/8”	25-200mm	4-5000	1	5000	250kHz	2	√	√	√
√	√		5/8” - 4 1/2”	16mm-115mm	4-5000	1	6000	250kHz	2	√	√	√
				12-17mm	1-10000	1	6000	250kHz	2	-	-	√
√	√		5/8” - 1 1/8”	16-30mm	8-5000	1	5000	165kHz	2	√	-	√
			1 1/2”- 2 3/8”	48-60mm	240-1200	1	**5000	100kHz	2	√	-	-
-	√		1”- 2 3/8”	25-60mm	240-1200	1	**5000	150kHz	2	-	-	√
			1/4” - 1”	4-25mm	32-5000	1	6000	250kHz	1	√	-	-
			1/2” - 1 1/8”	12-20mm	1-3072	1	4700	165kHz	2	√	-	-
			1 1/2”- 2 3/8”	48-60mm	6000	1	**5000	150kHz	2	√	-	-
			1/4”, 3/8”	6-10mm	1-16384	1	6000	1000kHz	1	-	-	√
				6-15mm	1-16384	1	6000	1000kHz	1	-	-	√
				6-10mm	256-65536	1-16384	6k/12k+	NA	1	-	-	√
				6-10mm	4096-8192	1-32768	12k	NA	1	-	-	√
			1/4”, 3/8”	10mm	1-3600	1	6000	125kHz	1	-	-	-
			1/4”, 3/8”	10mm	1-5000	1	6000	125kHz	1	-	-	-
			5/16”-9/16”	8-15mm	256-65536	1-16384	6k/12k+	NA	1	-	-	√
				6-15mm	4096-8192	1-32768	12k	NA	1	-	-	√
			3/8” - 3/4	6-16mm	1-3600	1	6000	125kHz	1	-	-	-
			1/2” - 1”	12-20mm	1-5000	1	6000	125kHz	1	√	-	-

CE All Avtron Encoders shown in the specifications table above are CE Rated.

ERMEC
ERMEC, S.L. BARCELONA
C/ Francesc Teixidó, 22
08918 Badalona SPAIN
Tel. +34 902 450 160
info@ermec.com
www.ermec.com
ERMEC, S.L. - MADRID
C/ Puerto Rico, 4
28222 Majadahonda (Madrid) SPAIN
bilbao@ermec.com
portugal@ermec.com

Company Locations

HQ / North America
243 Tuxedo Avenue
Cleveland, Ohio 44131
encoderhelpdesk@nidec-industrial.com
+1 216-642-1230

Germany, Europe, Middle East
Oliver Gleich: +49 331 98222513 - oliver.gleich@nidec-industrial.com

Mexico, Latin America, Caribbean, South America
Alejandro Casso: +52 81 2032 6632 - alejandro.casso@nidec-industrial.com

China / South East Asia
Ruimin Wang: +86 10 8225 1384 - ruimin.wang@nidec-industrial.com

AVTRON™ ENCODERS

A Nidec BRAND

+Información del producto

INTERRUPTORES

Pulsadores, Interruptores, para PCB, de Palanca, E-Stops, Piezoeléctricos, Antivandálicos, Microswitches

CONEXIÓN

Conectores circulares, Bases y conectores IEC, Cables flexibles

ELECTRÓNICA

Componentes para la protección y medición electrónica, Conectores PCB, Fusibles, Relés, Pilas

JOYSTICKS

Joysticks, Trackballs, Single Axis, HandGrips

TECLADOS

Teclados y Paneles

PILOTOS

Indicadores led, Pilotos, Lámparas

SENSORES

Sensores Reed, Sensores y Limitadores de temperatura, Sensores de proximidad

MOTION

Motores, Motorreductores, Encóders, Solenoides, Actuadores lineales, PMG

VENTILACIÓN

Ventiladores de AC y DC, accesorios y unidades de ventilación

ERMEC

Tel: 902450160
info@ermec.com - www.ermec.es

Francesc Teixidó,22
E-08918 Badalona (BCN)

Puerto Rico, 4
E-28220 Majadahonda (MAD)