UAG3/4

3/4

Dimensions (mm)	∅ 20 x 17
Step angle (°)	18
Holding torque (mNm)	5.3 / 3.9 (standard magnet, stronger magnet on request)
Detent torque (mNm)	> 0.6 (standard magnet, stronger magnet on request)
Winding	bipolar/unipolar
Gear combination	on request

Note: All torque and power output values are minimum values, at rated voltage and motor temperature 23°C.

Standard Data

Climatic class	wide-spread according to DIN IEC 60721-2-1 : 2015
Ambient temperature operation	°C -20...+60
Ambient temperature storage	°C -40...+100
Thermal resistance at f=0 R_{therm}	47 K/W
Thermal class	130 (B) according to DIN EN 60085 : 2008
Approval	standard
Mounting	any position
Electrical connection	lead wires AWG28, insulation Ø 0.82 mm
Protection	IP40 according to DIN EN 60529 : 2014
Weight	22 g
Rotor stalling	motor can be stopped when voltage is applied, without being overheated
Bearings	sintered bronze, self-lubricating

Order Reference

Type	Stepper Motor	UAG	3	3	N	05	R	E
Configuration	3 bipolar 4 unipolar							
Rotor shaft, mounting	3 centring 8 mm, mounting plate with long holes 5 centring 8 mm, mounting plate (for clipping) E centring 6 mm, mounting plate with long holes G centring 6 mm, mounting plate (for clipping)							
Approval	N Approval Standard							
Resistance	See next page Resistance per winding for bipolar or unipolar.							
Direction	reversible							
Cable	E cable 150 mm with Tyco connector CT 173977-4 1-6 (other on request)							

All specifications are representative only and maybe subject to variation. For confirmation of values, please contact Johnson Electric.
Please also read "Saia Motors Important Notes" on catalog or at www.johnsonelectric.com/SaiaMotorsNotes

UAG3/4

Technical Data

bipolar (UAG3)	Rated voltage UN	V	12	6
	Duty cycle	%	100	100
	Resistance R_{20}	Ω	150	40
	Winding code		05	07
unipolar (UAG4)	Rated voltage UN	V	12	
	Duty cycle	%	100	
	Resistance R_{20}	Ω	150	
	Winding code		06	

Steps per revolution	20
Winding temperature T_{max}	130° C
Rotor inertia J_R	0.26 gcm²
Holding torque M_H	0.53 cNm (UAG3) 0.39 cNm (UAG4) (standard magnet, stronger magnet on request)
Detent torque M_H	> 0.6 mNm
Direction of rotation	reversible

Dimensions

motor type	∅ D	
UAG30	∅ 8	0 -0.05
UAG3A	∅ 6	0 -0.05
UAG40	∅ 8	0 -0.05
UAG4A	∅ 6	0 -0.05

motor type	∅ D	
UAG33	∅ 8	0 -0.05
UAG3E	∅ 6	0 -0.05
UAG43	∅ 8	0 -0.05
UAG4E	∅ 6	0 -0.05

motor type	∅ D	
UAG35	∅ 8	0 -0.05
UAG3G	∅ 6	0 -0.05
UAG45	∅ 8	0 -0.05
UAG4G	∅ 6	0 -0.05

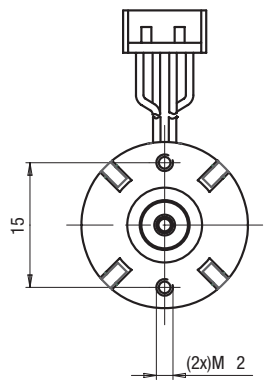

Use bolts with
thread length 4mm max.
Screw in torque 10cNm max.

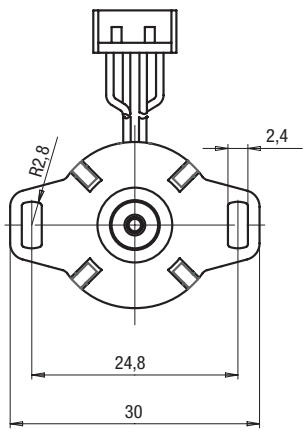

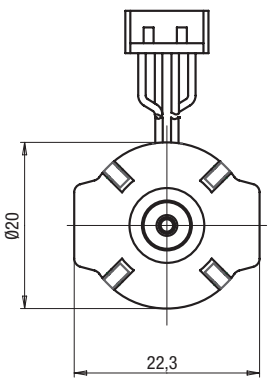

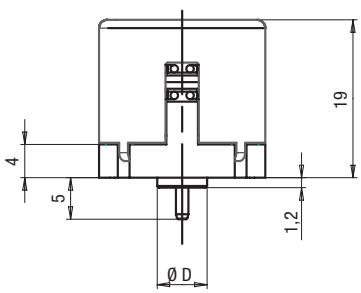

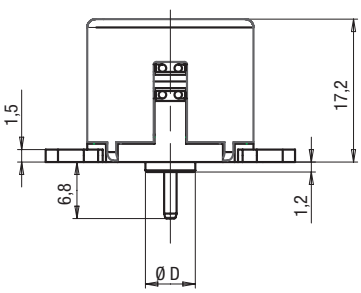

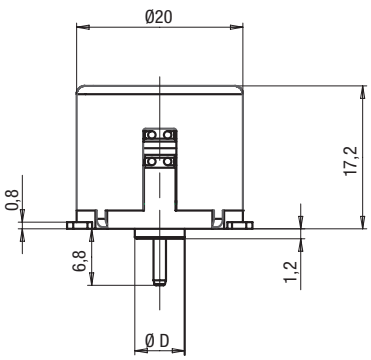

UAG3/4

Dimensions

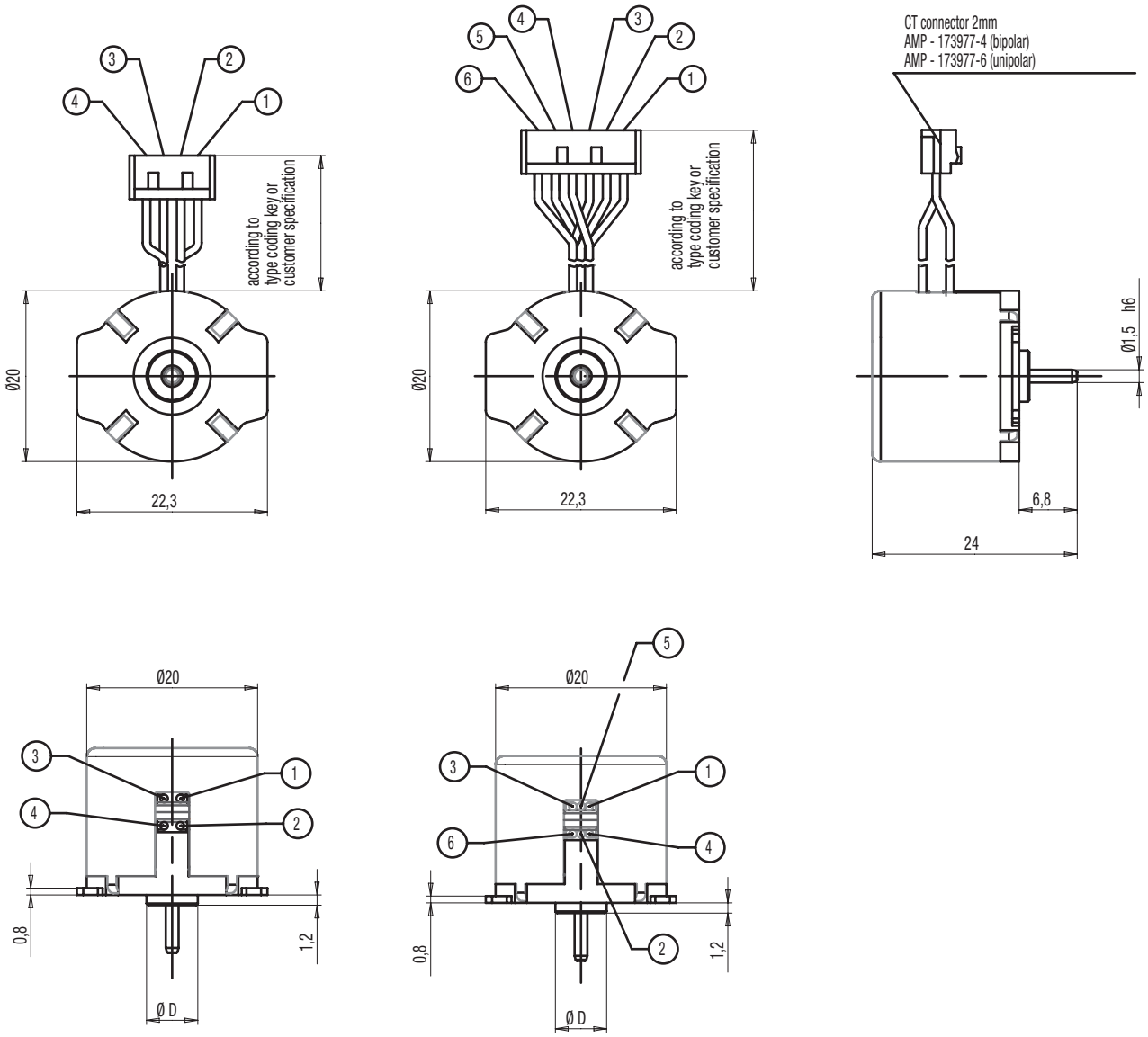

Circuit diagram

bipolar

		step				
		0	I	II	III	IV
wire	1	+	+	-	-	+
	2	+	-	-	+	+
	3	-	-	+	+	-
	4	-	+	+	-	-

unipolar

		step				
		0	I	II	III	IV
wire	1	-	-			-
	2	-			-	-
	3	+	+	+	+	+
	4	+	+	+	+	+
	5			-	-	
	6		-	-		

clockwise rotation

counter clockwise rotation

UAG3/4

UAG3 - Pull-in range

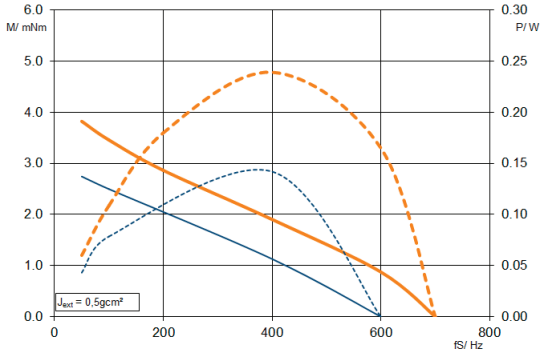

UAG3 - Pull-out range

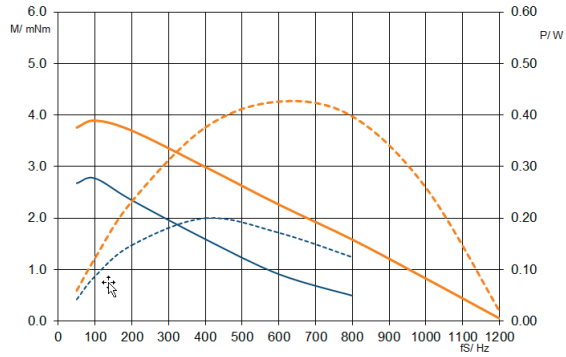

UAG4 - Pull-in range

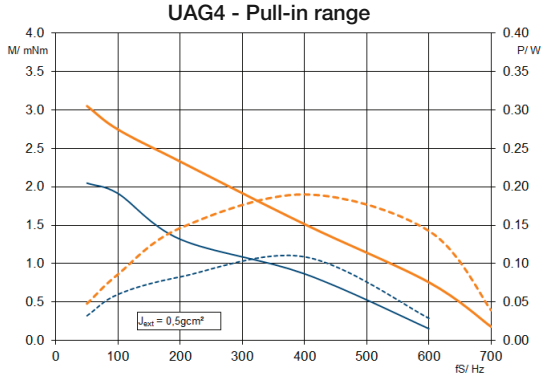

UAG4 - Pull-out range

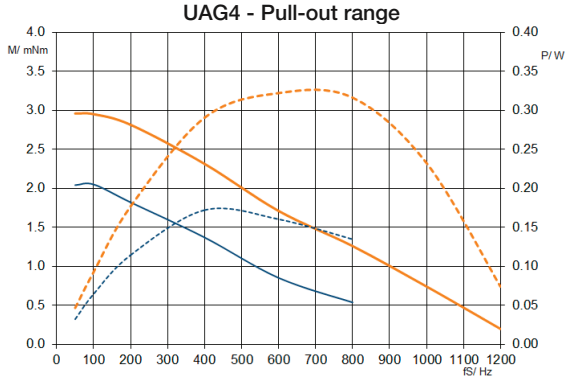

UAG3 - Pull-out range chopper (winding 40ohm, voltage 24Vdc)

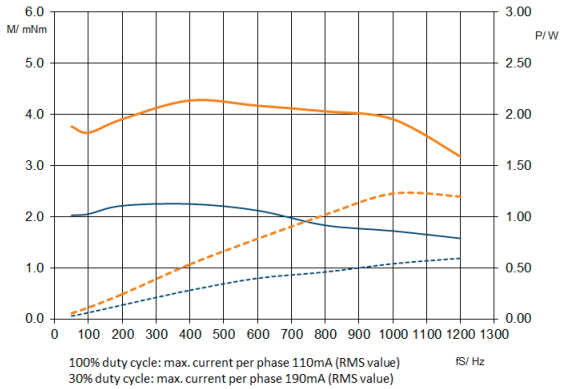

M - Duty cycle 30 %
M - Duty cycle 100%
P - Duty cycle 30 %
P - Duty cycle 100 %

UCD

UCD1/7; UCD2/8

Dimensions (mm)	∅ 28 x 24
Step angle (°)	7.5
Holding torque * (cNm)	1.4–2.3
Detent torque (cNm)	0.15–0.30
Winding	bipolar/unipolar
Gear combination	on request

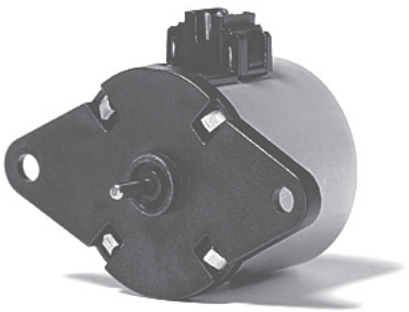

* values for connector version (connection B or D) / values of lead wire version (connection N) are up to 20 % lower

Note: All torque and power output values are minimum values, at rated voltage and motor temperature 23°C.

Standard Data

Climatic class	wide-spread according to DIN IEC 60721-2-1 : 2015
Ambient temperature operation	°C -15 ... +60
Ambient temperature storage	°C -20 ... +100
Thermal resistance at f=0 R_{therm}	29 K/W
Thermal class	130 (B) according to DIN EN 60085 : 2008
Approval	standard
Mounting	any position
Electrical connection	connector type D or N
Protection	IP30 according to DIN EN 60529 : 2014
Weight	54 g
Rotor stalling	motor can be stopped when voltage is applied, without being overheated
Bearings	Sintered bronze, self-lubricating

Order Reference

Type	Stepper Motor				UCD	1	0	N	18	R	B
Configuration	1	bipolar, standard magnet	7	bipolar, stronger magnet							
	2	unipolar, standard magnet	8	unipolar, stronger magnet							
Rotor shaft, mounting	3	centring 8 mm, shaft 2.0 mm, screw plate	E	centring 10 mm, shaft 2.0 mm, screw plate							
	4	centring 8 mm, shaft 1.5 mm, screw plate	K	centring 10 mm, shaft 1.5 mm, screw plate							
	0	centring 8 mm, shaft 2.0 mm, clip	A	centring 10 mm, shaft 2.0 mm, clip							
	1	centring 8 mm, shaft 1.5 mm, clip	C	centring 10 mm, shaft 1.5 mm, clip							
Approval	N	Approval Standard									
Resistance		see next pages; Resistance per winding for bipolar or unipolar									
Direction	R	reversible									
Connection	D	see next pages “Connection Types” and page 145 “Connection Types” for B									
	N										

All specifications are representative only and maybe subject to variation. For confirmation of values, please contact Johnson Electric.
Please also read “Saia Motors Important Notes” on catalog or at www.johnsonelectric.com/SaiaMotorsNotes

UCD

Technical Data

bipolar	Configuration		UCD1	UCD7	
	Holding torque M_H *	cNm	1.6	2.3	
	Detent torque M_S	cNm	0.15	0.3	
	Rotor inertia J_R	gcm²	2.2	2.4	
	Steps per revolution		48		
	Direction of rotation	V	reversible		
	Specific Technical Data Lead Wire Versions (Connection type N)				
	Rated voltage UN	V	6	12	24
	Duty cycle	%	100	100	100
	Resistance R_{20}	Ω	24	90	380
	Winding code		18	03	04
	Specific Technical Data Connector Versions				
	Rated voltage UN	V	6	12	24
	Duty cycle	%	100	100	100
	Resistance R_{20}	Ω	24	90	380
	Winding code		07	01	02
unipolar	Configuration		UCD2	UCD8	
	Holding torque M_H *	cNm	1.4	2.0	
	Detent torque M_S	cNm	0.15	0.3	
	Rotor inertia J_R	gcm²	2,1	2,4	
	Steps per revolution		48		
	Direction of rotation	V	reversible		
	Specific Technical Data Lead Wire Versions				
	Rated voltage UN	V	12	24	6
	Duty cycle	%	100	100	100
	Resistance R_{20}	Ω	90	380	24
	Winding code		10	11	12
	Specific Technical Data Connector Versions				
	Rated voltage UN	V	12	24	
	Duty cycle	%	100	100	
	Resistance R_{20}	Ω	90	380	
	Winding code		01	02	

* values of connector version (connection B or D) / values of lead wire version are up to 20 % lower

Circuit diagram bipolar

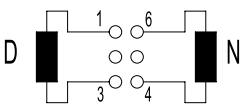

connector \ step	I	II	III	IV
1	+	+	-	-
3	-	-	+	+
4	-	+	+	-
6	+	-	-	+

→ counter clockwise rotation
← clockwise rotation

unipolar

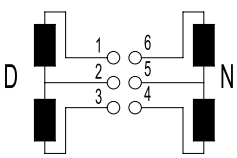

connector \ step	I	II	III	IV
1			-	-
2	+	+	+	+
3	-	-		
4	-			-
5	+	+	+	+
6		-	-	

→ counter clockwise rotation
← clockwise rotation

UCD

Dimensions Version with Connector D

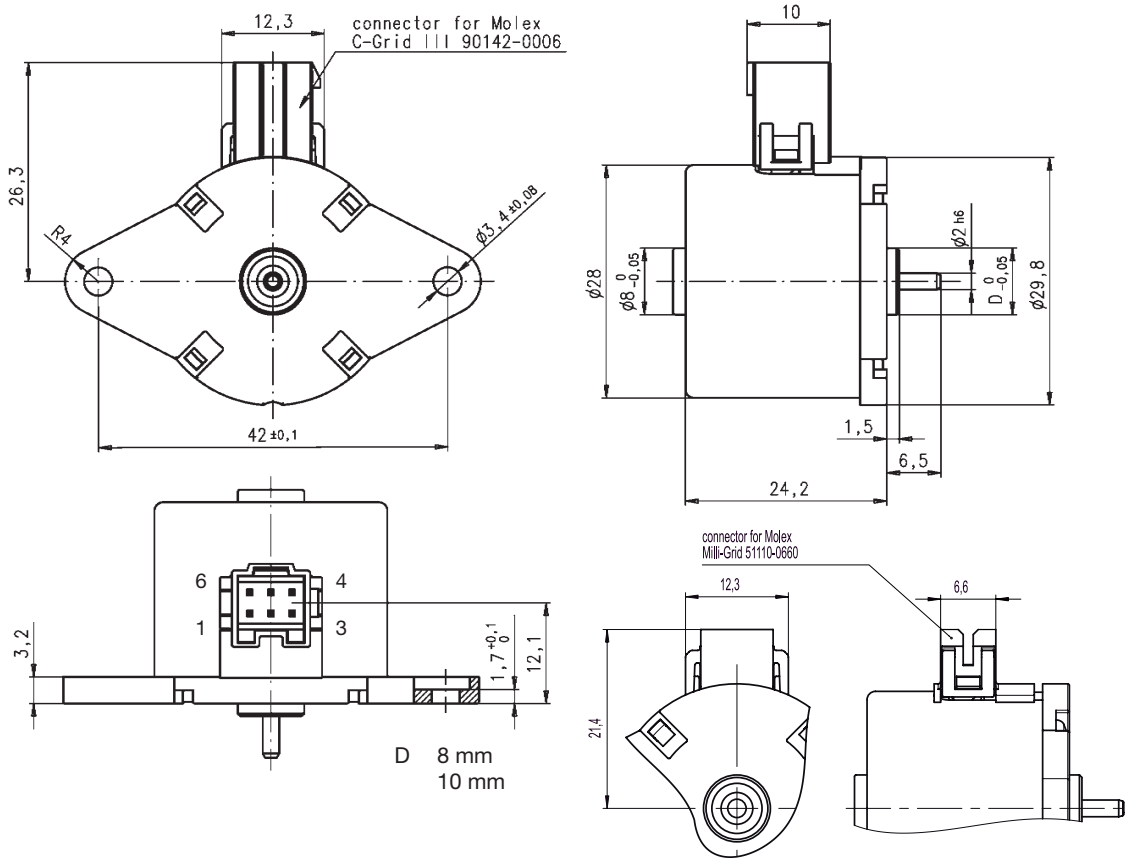

D 8 mm
10 mm

Version with Connector N (Lead wire version)

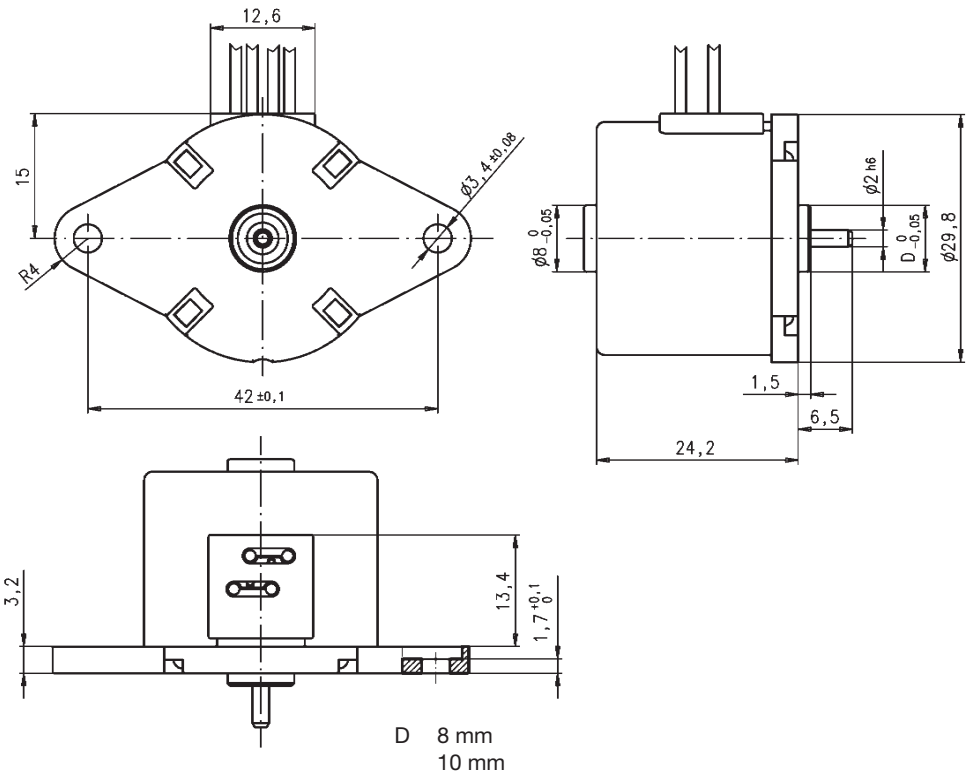

D 8 mm
10 mm

UCD

Performance Chart

UCD1 - Pull-in range

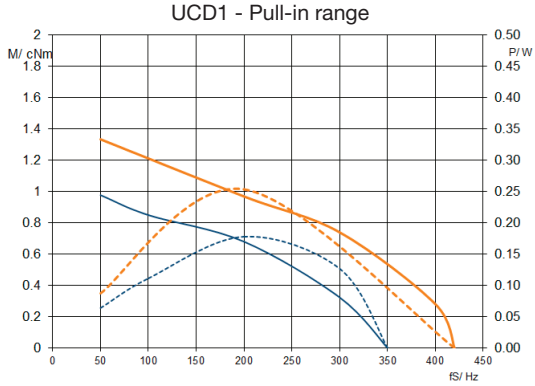

UCD1 - Pull-out range

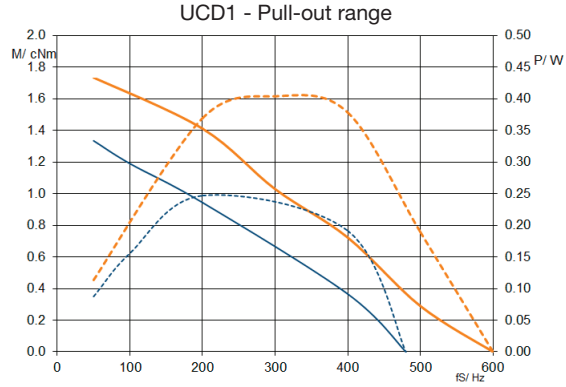

UCD2 - Pull-in range

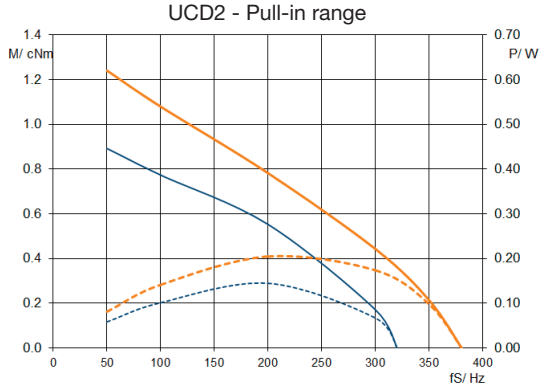

UCD2 - Pull-out range

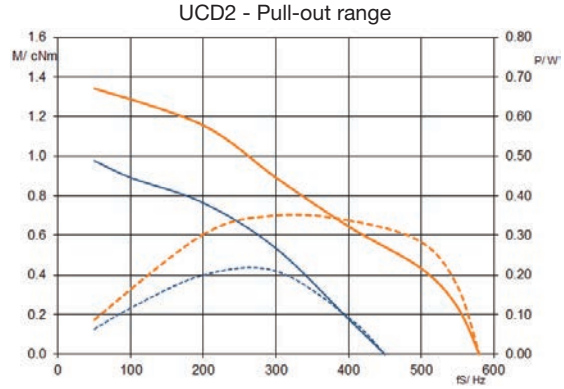

UCD7 - Pull-in range

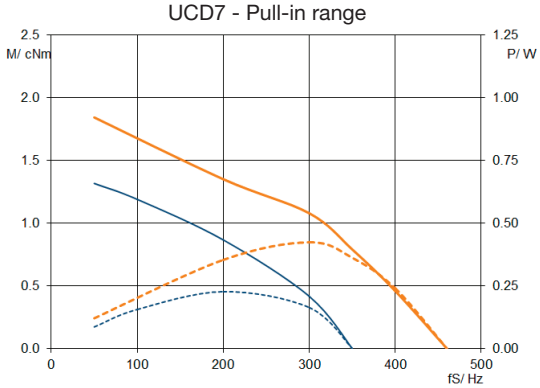

UCD7 - Pull-out range

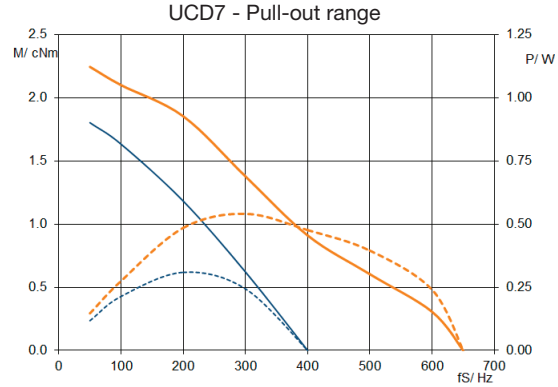

UCD8 - Pull-in range

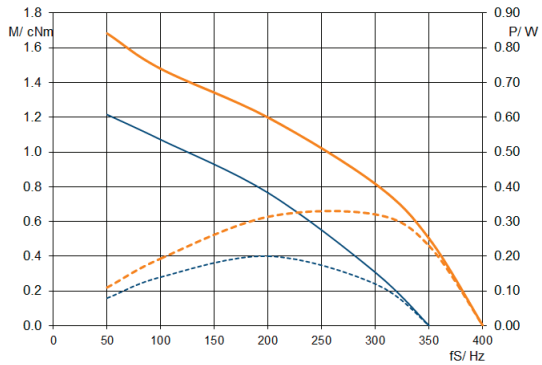

UCD8 - Pull-out range

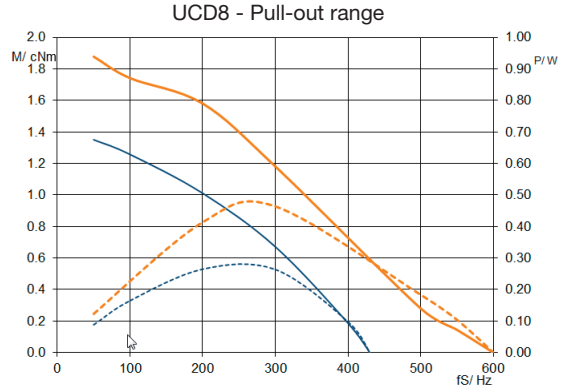

M - Duty cycle 30 %
M - Duty cycle 100%
P - Duty cycle 30 %
P - Duty cycle 100 %

UCB

UCB1/7; UCB2/8

Dimensions (mm)	∅ 28 x 24
Step angle (°)	15
Holding torque * (cNm)	1.1–2.4
Detent torque (cNm)	0.17/0.38
Winding	bipolar/unipolar
Gear combination	on request

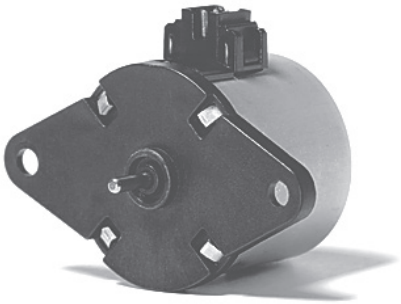

* values for connector version (connection B or D) / values of lead wire version (connection N) are up to 20 % lower.

Note: All torque and power output values are minimum values, at rated voltage and motor temperature 23°C.

Standard Data

Climatic class	wide-spread according to DIN IEC 60721-2-1 : 2015
Ambient temperature operation	°C -15 ... +60
Ambient temperature storage	°C -20 ... +100
Thermal resistance at f=0 R_{therm}	29 K/W
Thermal class	130 (B) according to DIN EN 60085 : 2008
Approval	standard
Mounting	any position
Electrical connection	connector type D or N
Protection	IP30 according to DIN EN 60529 : 2014
Weight	54 g
Rotor stalling	motor can be stopped when voltage is applied, without being overheated
Bearings	Sintered bronze, self-lubricating

Order Reference

Type	Stepper Motor						UCB	1	0	N	18	R	B
Configuration	1	bipolar, standard magnet	7	bipolar, stronger magnet									
	2	unipolar, standard magnet	8	unipolar, stronger magnet									
Rotor shaft, mounting	3	centring 8 mm, shaft 2.0 mm, screw plate	E	centring 10 mm, shaft 2.0 mm, screw plate									
	4	centring 8 mm, shaft 1.5 mm, screw plate	K	centring 10 mm, shaft 1.5 mm, screw plate									
	0	centring 8 mm, shaft 2.0 mm, clip	A	centring 10 mm, shaft 2.0 mm, clip									
	1	centring 8 mm, shaft 1.5 mm, clip	C	centring 10 mm, shaft 1.5 mm, clip									
Approval	N	Approval Standard											
Resistance		see next pages; Resistance per winding for bipolar or unipolar											
Direction	R	reversible											
Connection	D	see next pages “Connection Types” and page 145 “Connection Types” for B											
	N												

All specifications are representative only and maybe subject to variation. For confirmation of values, please contact Johnson Electric.
Please also read “Saia Motors Important Notes” on catalog or at www.johnsonelectric.com/SaiaMotorsNotes

UCB

Technical Data

bipolar	Configuration		UCB1	UCB7	
	Holding torque M_H *	cNm	1.5	2.4	
	Detent torque M_S	cNm	0.17	0.38	
	Rotor inertia J_R	gcm^2	2.1	2.4	
	Steps per revolution		24		
	Direction of rotation	V	reversible		
	Specific Technical Data Lead Wire Versions (Connection type N)				
	Rated voltage UN	V	6	12	24
	Duty cycle	%	100	100	100
	Resistance R_{20}	Ω	24	90	380
	Winding code		18	03	04
	Specific Technical Data Connector Versions				
	Rated voltage UN	V	6	12	24
	Duty cycle	%	100	100	100
	Resistance R_{20}	Ω	24	90	380
	Winding code		07	01	02
unipolar	Configuration		UCB2	UCB8	
	Holding torque M_H *	cNm	1.1	1.8	
	Detent torque M_S	cNm	0.17	0.38	
	Rotor inertia J_R	gcm^2	2.1	2.4	
	Steps per revolution		24		
	Direction of rotation	V	reversible		
	Specific Technical Data Lead Wire Versions				
	Rated voltage UN	V	12	24	6
	Duty cycle	%	100	100	100
	Resistance R_{20}	Ω	90	380	24
	Winding code		10	11	12
	Specific Technical Data Connector Versions				
	Rated voltage UN	V	12	24	
	Duty cycle	%	100	100	
	Resistance R_{20}	Ω	90	380	
	Winding code		01	02	

* values of connector version (connection B or D) / values of lead wire version are up to 20 % lower

Circuit diagram bipolar

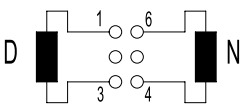

connector \ step	I	II	III	IV
1	+	+	-	-
3	-	-	+	+
4	-	+	+	-
6	+	-	-	+

→ counter clockwise rotation
← clockwise rotation

unipolar

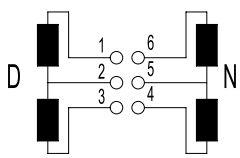

connector \ step	I	II	III	IV
1			-	-
2	+	+	+	+
3	-	-		
4	-			-
5	+	+	+	+
6		-	-	

→ counter clockwise rotation
← clockwise rotation

UCB

Dimensions Version with Connector D

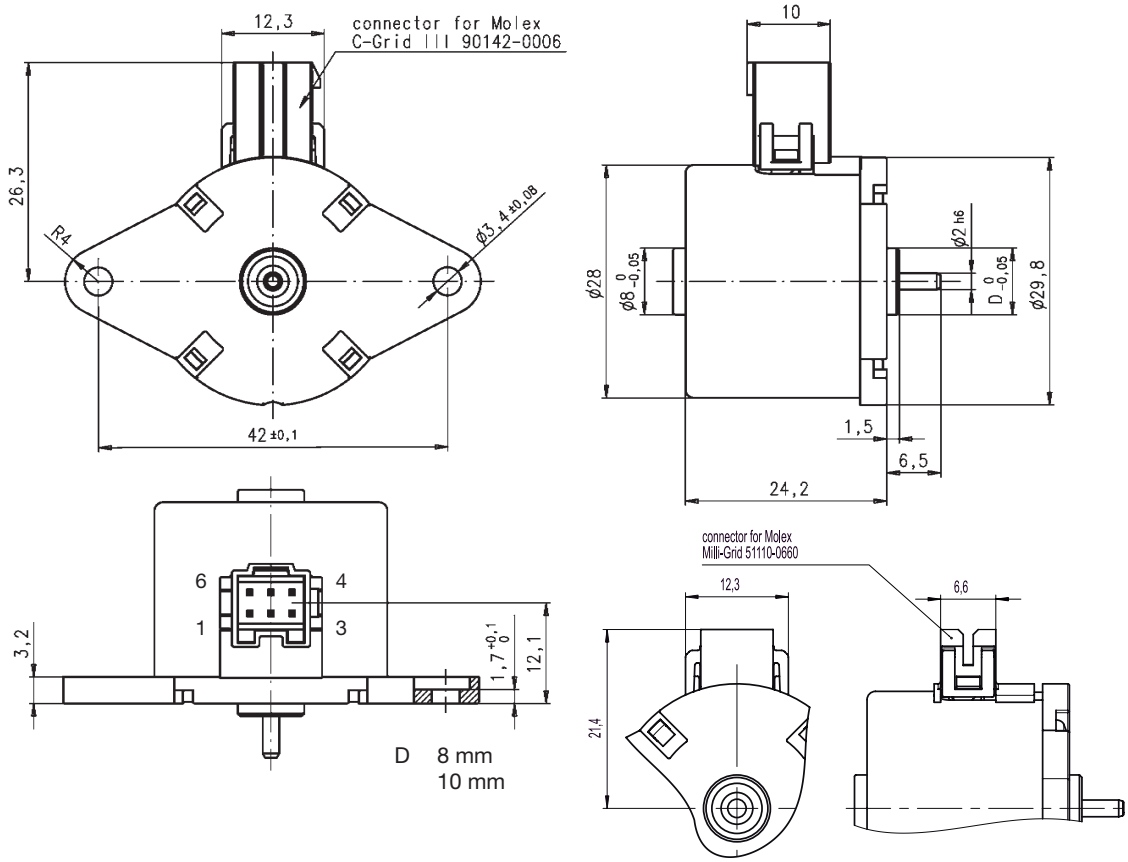

D 8 mm
10 mm

Version with Connector N (Lead wire version)

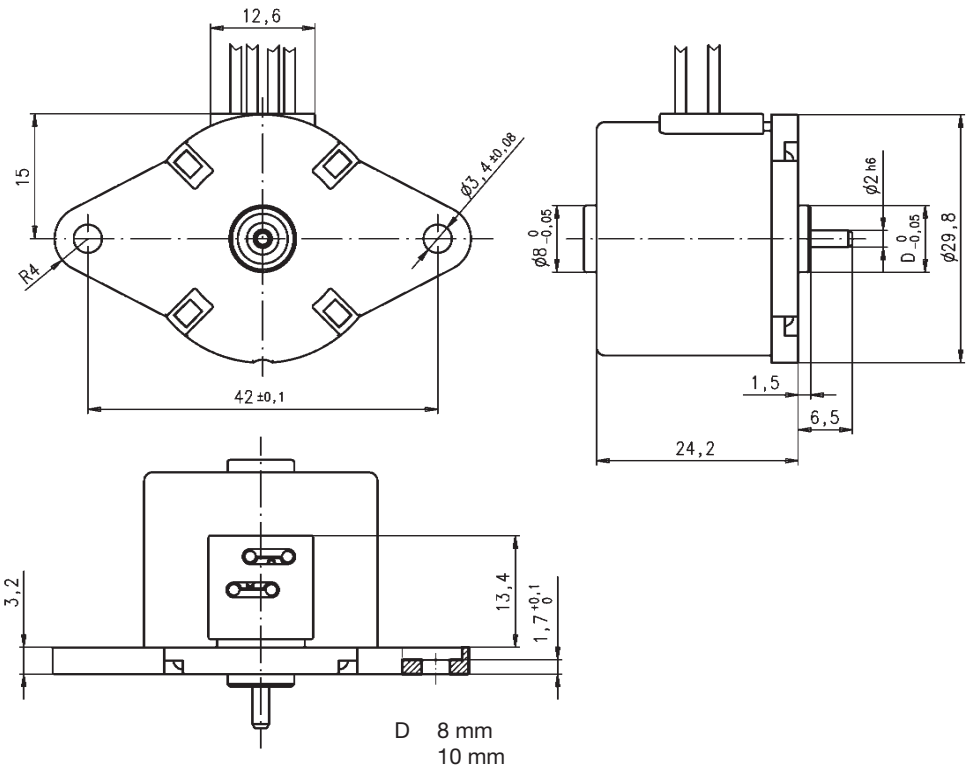

D 8 mm
10 mm

UCB

Performance Chart

UCB1 - Pull-in range

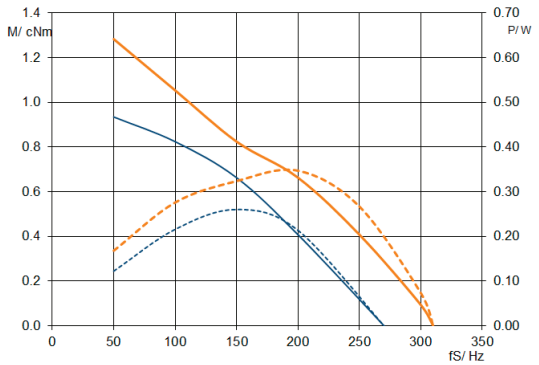

UCB1 - Pull-out range

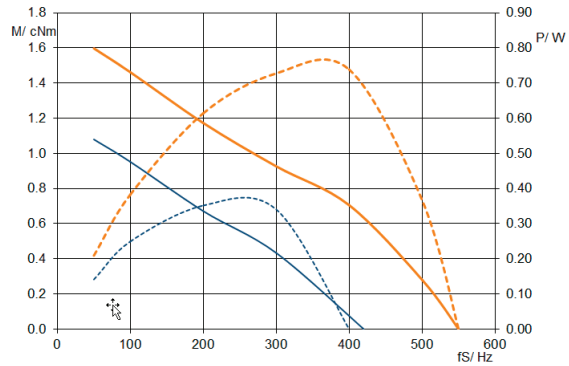

UCB2 - Pull-in range

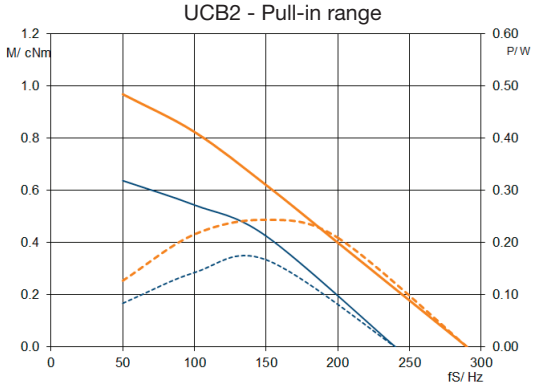

UCB2 - Pull-out range

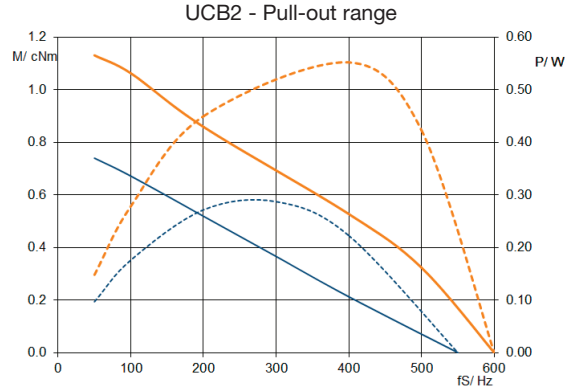

UCB7 - Pull-in range

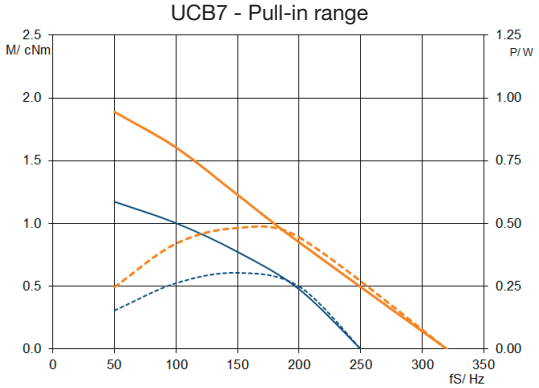

UCB7 - Pull-out range

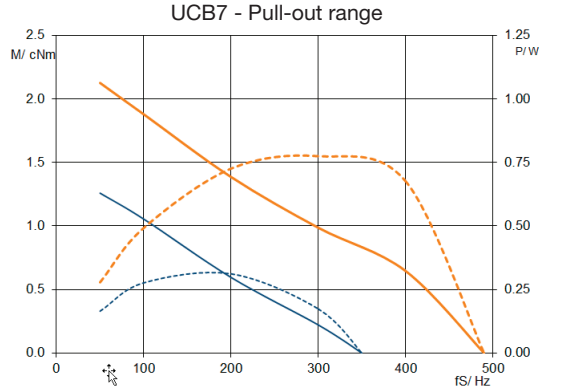

UCB8 - Pull-in range

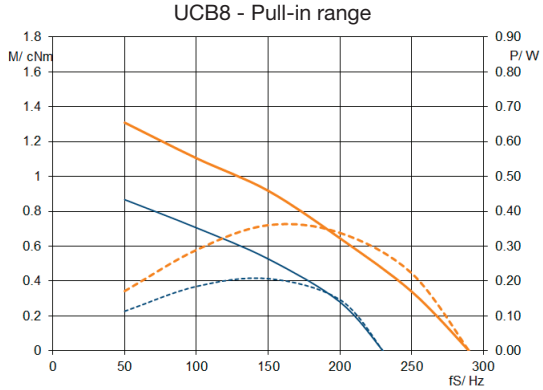

UCB8 - Pull-out range

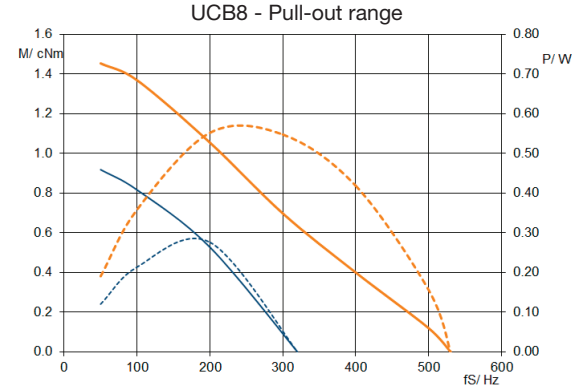

M - Duty cycle 30 %
M - Duty cycle 100%
P - Duty cycle 30 %
P - Duty cycle 100 %

UBD

UBD1/2/5/6

Dimensions (mm)	∅ 36 x 21
Step angle (°)	7.5
Holding torque (cNm)	1.1–1.6
Detent torque (cNm)	0.19/0.23
Winding	bipolar/unipolar
Gear combination	D, M, B, F, V

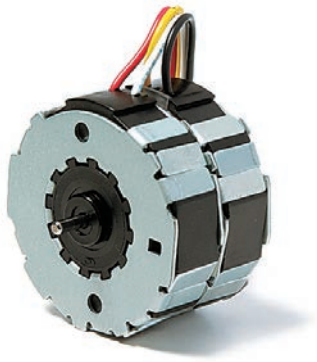

Note: All torque and power output values are minimum values, at rated voltage and motor temperature 23°C.

Standard Data

Climatic class	wide-spread according to DIN IEC 60721-2-1 : 2015
Ambient temperature operation	°C -15...+55
Ambient temperature storage	°C -20...+100
Thermal resistance at f=0 R_{therm}	27 K/W
Thermal class	105 (A) according to DIN EN 60085 : 2008
Approval	standard (UL/CSA on request)
Mounting	any position
Electrical connection	cable
Protection	IP40 according to DIN EN 60529 : 2014
Weight	60 g
Rotor stalling	motor can be stopped when voltage is applied, without being overheated
Bearings	sintered bronze, self-lubricating
Electric strength	according to DIN EN 60034-1/DIN EN 60335-1

Order Reference

Type	Stepper Motor						UBD	1	0	N	03	R	E
Configuration	1	bipolar, standard magnet	5	bipolar, stronger magnet									
	2	unipolar, standard magnet	6	unipolar, stronger magnet									
Rotor shaft, mounting	0	centring 8 mm, shaft 2.0 mm, clip	A	centring 10 mm, shaft 2.0 mm, clip									
	1	centring 8 mm, shaft 1.5 mm, clip	C	centring 10 mm, shaft 1.5 mm, clip									
	3	centring 8 mm, shaft 2.0 mm, screw plate	E	centring 10 mm, shaft 2.0 mm, screw plate									
	4	centring 8 mm, shaft 1.5 mm, screw plate	K	centring 10 mm, shaft 1.5 mm, screw plate									
Approval	N	Approval Standard											
Resistance		See next page Resistance per winding for bipolar or unipolar.											
Direction		reversible											
Cable	E	cable 150 mm (other on request)											

All specifications are representative only and maybe subject to variation. For confirmation of values, please contact Johnson Electric.
Please also read "Saia Motors Important Notes" on catalog or at www.johnsonelectric.com/SaiaMotorsNotes

UBD

Technical Data

bipolar			UBD1		UBD5			
	Holding torque M_H	cNm	1.5		1.6			
	Detent torque M_S	cNm	0.19		0.23			
	Rotor inertia J_R	gcm2	2.8		2.9			
UBD1/5	Rated voltage U_N	V	6	12	24	6	12	24
	Duty cycle	%	100	100	100	100	100	100
	Resistance R_{20}	Ω	18.5	100	460	27.5	133	535
	Winding code		03	05	06	01	04	07
unipolar			UBD2		UBD6			
	Holding torque M_H	cNm	1.1		1.35			
	Detent torque M_S	cNm	0.19		0.23			
	Rotor inertia J_R	gcm2	2.8		2.9			
UBD2/6	Rated voltage U_N	V	6	12	24	6	12	24
	Duty cycle	%	100	100	100	100	100	100
	Resistance R_{20}	Ω	28	120	500	41	172	700
	Winding code		07	08	09	01	02	03
UBD3/7	Rated voltage U_N	V	6	12	24			
	Duty cycle	%	100	100	100			
	Resistance R_{20}	Ω	18.5	100	460			
	Winding code		03	05	06			
UBD4/8	Rated voltage U_N	V	6	12	24			
	Duty cycle	%	100	100	100			
	Resistance R_{20}	Ω	28	120	500			
	Winding code		07	08	09			
	Steps per revolution		48					
	Winding temperature T_{max}	°C	105					
	Direction of rotation		reversible					

Dimensions

Mounting with screw plate

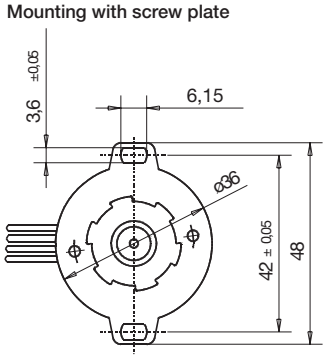

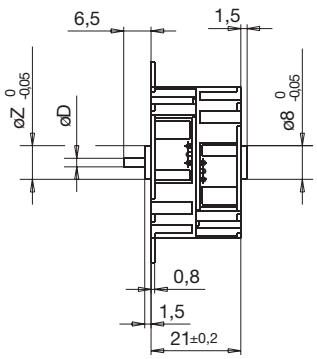

Mounting with snap-on clip
(item no. 4199 48230)

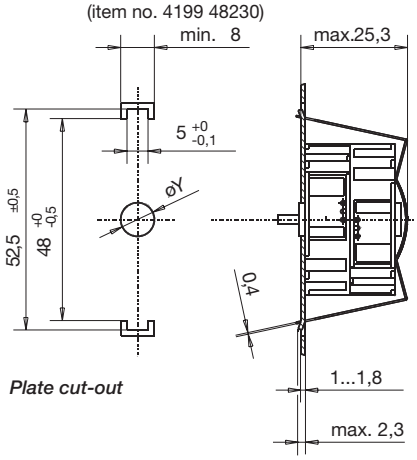

Plate cut-out

Mounting with screw plate

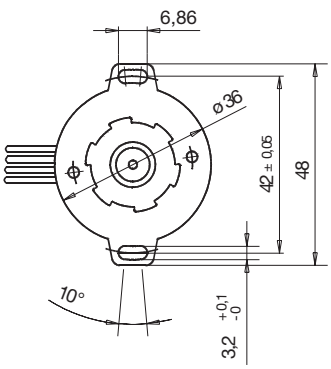

øD Rotor shaft	
ø 2 h6	
ø 1.5 js8	
øZ	øY
8	8F8
10	10F8

Screw clip: 4199 48450

UBD

Performance Chart

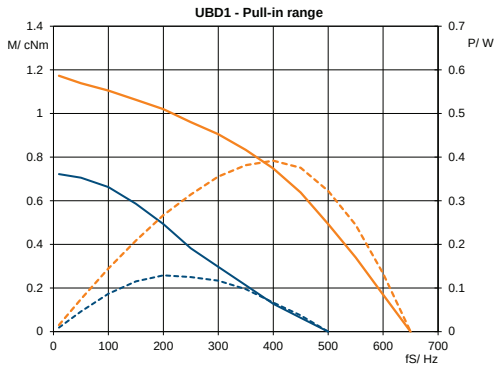

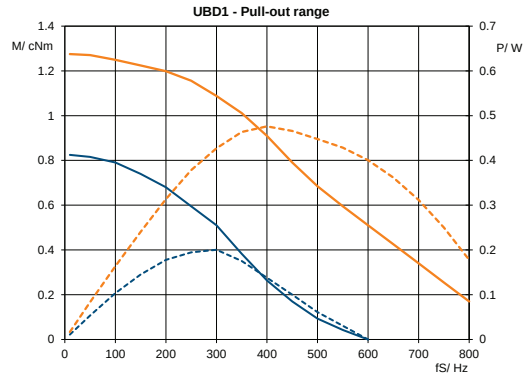

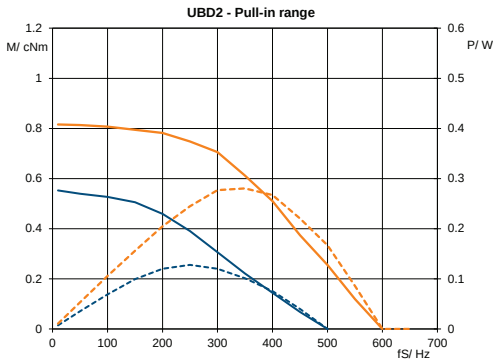

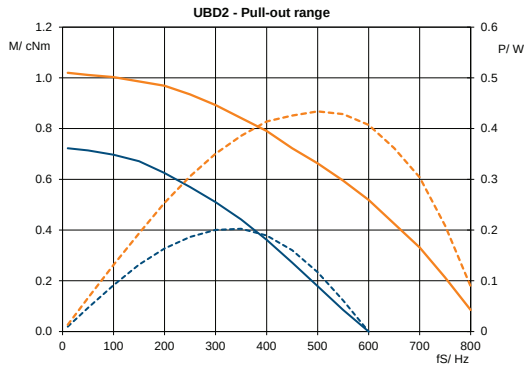

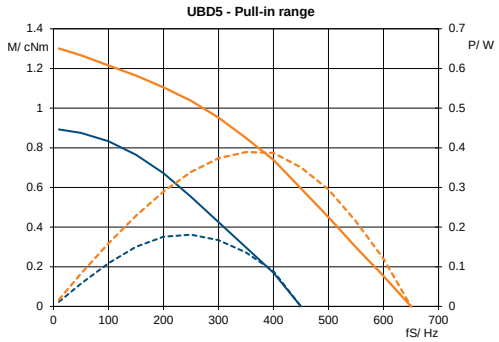

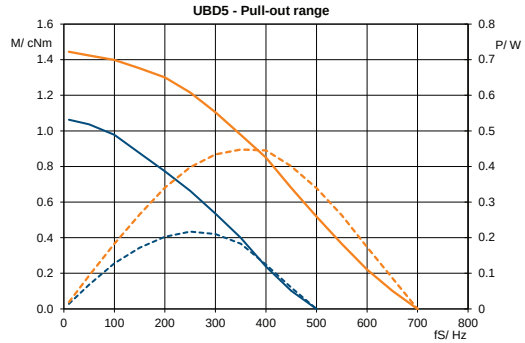

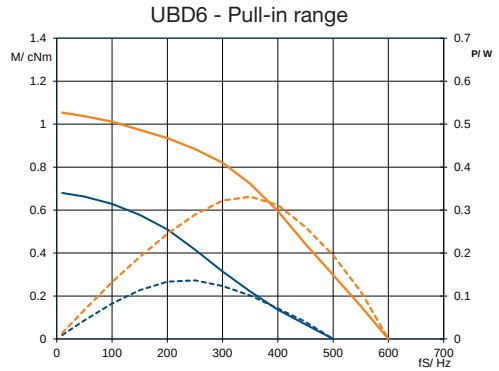

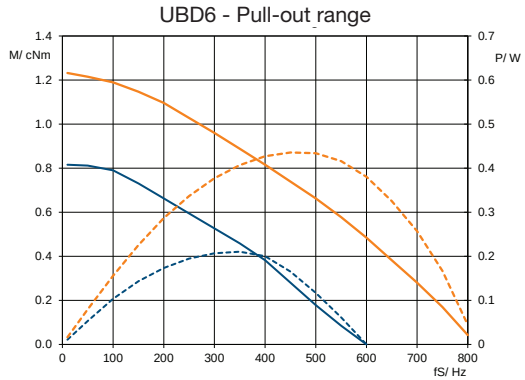

M - Duty cycle 30 %
M - Duty cycle 100%
P - Duty cycle 30 %
P - Duty cycle 100 %

UBB

UBB1/2/5/6

Dimensions (mm)	∅ 36 x 21
Step angle (°)	15
Holding torque (cNm)	0.85–1.6
Detent torque (cNm)	0.21/0.31
Winding	bipolar/unipolar
Gear combination	D, M, B, F, V

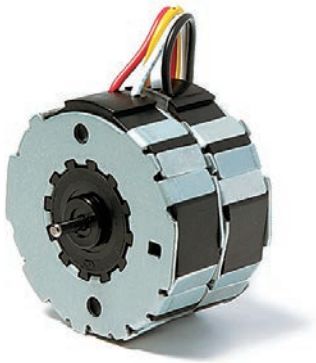

Note: All torque and power output values are minimum values, at rated voltage and motor temperature 23°C.

Standard Data

Climatic class	wide-spread according to DIN IEC 60721-2-1 : 2015
Ambient temperature operation	°C -15...+55
Ambient temperature storage	°C -20...+100
Thermal resistance at f=0 R_{therm}	27 K/W
Thermal class	105 (A) according to DIN EN 60085 : 2008
Approval	standard (UL/CSA on request)
Mounting	any position
Electrical connection	cable
Protection	IP40 according to DIN EN 60529 : 2014
Weight	60 g
Rotor stalling	motor can be stopped when voltage is applied, without being overheated
Bearings	sintered bronze, self-lubricating
Electric strength	according to DIN EN 60034-1/DIN EN 60335-1

Order Reference

Type	Stepper Motor					UBB	1	0	N	03	R	E
Configuration	1	bipolar, standard magnet	5	bipolar, stronger magnet								
	2	unipolar, standard magnet	6	unipolar, stronger magnet								
Rotor shaft, mounting	0	centring 8 mm, shaft 2.0 mm, clip	A	centring 10 mm, shaft 2.0 mm, clip								
	1	centring 8 mm, shaft 1.5 mm, clip	C	centring 10 mm, shaft 1.5 mm, clip								
	3	centring 8 mm, shaft 2.0 mm, screw plate	E	centring 10 mm, shaft 2.0 mm, screw plate								
	4	centring 8 mm, shaft 1.5 mm, screw plate	K	centring 10 mm, shaft 1.5 mm, screw plate								
Approval	N	Approval Standard										
Resistance		See next page Resistance per winding for bipolar or unipolar.										
Direction		reversible										
Cable	E	cable 150 mm (other on request)										

All specifications are representative only and maybe subject to variation. For confirmation of values, please contact Johnson Electric.
Please also read "Saia Motors Important Notes" on catalog or at www.johnsonelectric.com/SaiaMotorsNotes

UBB

Technical Data

bipolar			UBB1	UBB5	
	Holding torque M_H	cNm	1.3	1.6	
	Detent torque M_S	cNm	0.21	0.31	
	Rotor inertia J_R	gcm²	2.8	2.9	
UBB1/5	Rated voltage U_N	V	6	12	24
	Duty cycle	%	100	100	100
	Resistance R_{20}	Ω	18.5	100	460
	Winding code		03	05	06
unipolar			UBB2	UBB6	
	Holding torque M_H	cNm	0.85	1.2	
	Detent torque M_S	cNm	0.21	0.31	
	Rotor inertia J_R	gcm²	2.8	2.9	
UBB2/6	Rated voltage U_N	V	6	12	24
	Duty cycle	%	100	100	100
	Resistance R_{20}	Ω	28	120	500
	Winding code		07	08	09
UBB3/7	Rated voltage U_N	V	6	12	24
	Duty cycle	%	100	100	100
	Resistance R_{20}	Ω	18.5	100	460
	Winding code		03	05	06
UBB4/8	Rated voltage U_N	V	6	12	24
	Duty cycle	%	100	100	100
	Resistance R_{20}	Ω	28	120	500
	Winding code		07	08	09
	Steps per revolution		24		
	Winding temperature T_{max}	°C	105		
	Direction of rotation		reversible		

Dimensions

Mounting with screw plate

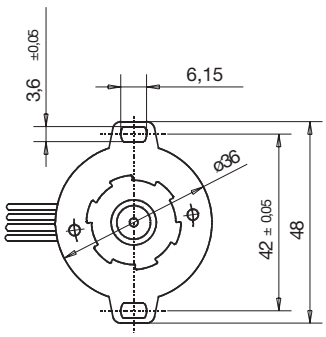

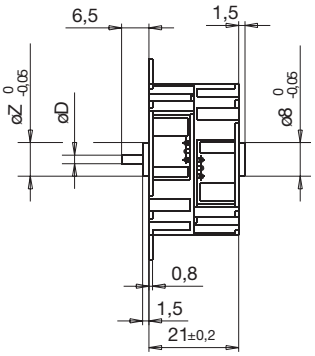

Mounting with snap-on clip
(item no. 4199 48230)

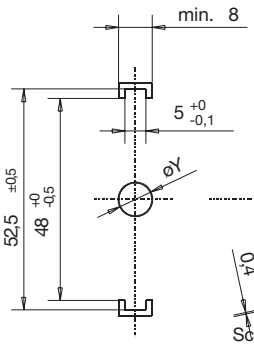

Plate cut-out

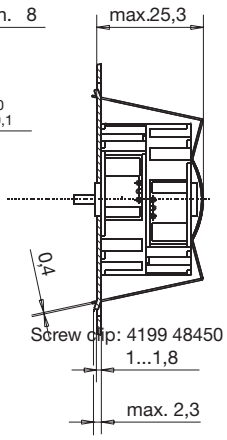

Mounting with screw plate

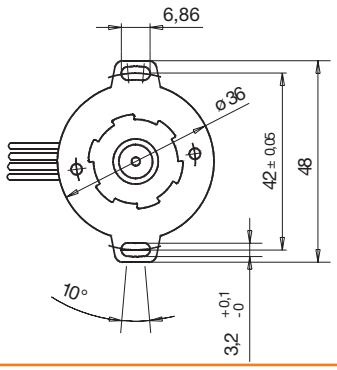

øD Rotor shaft
ø 2 h6
ø 1.5 js8

øZ	øY
8	8F8
10	10F8

UBB

Performance Chart

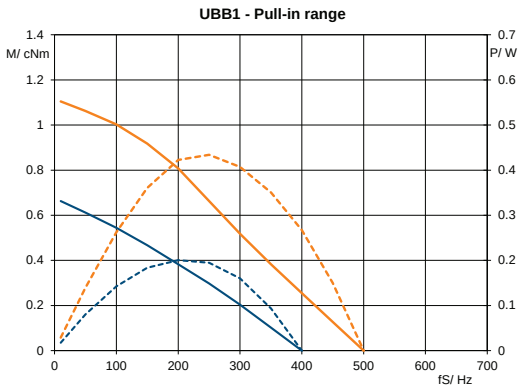

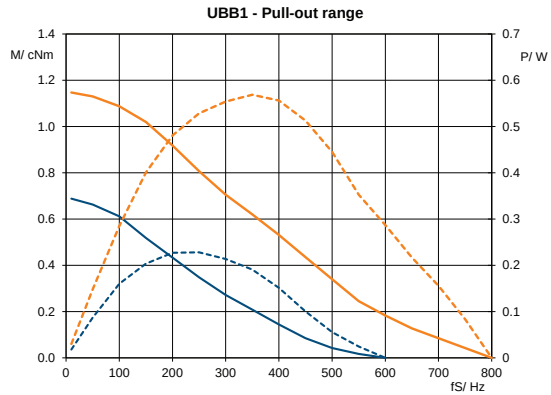

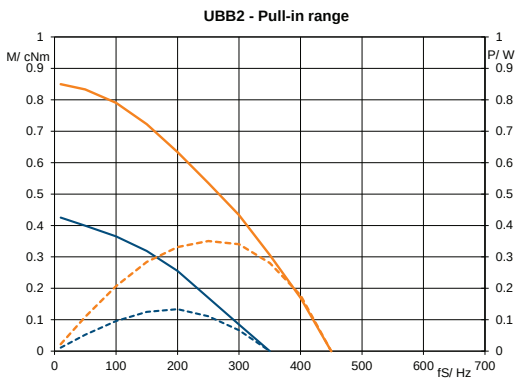

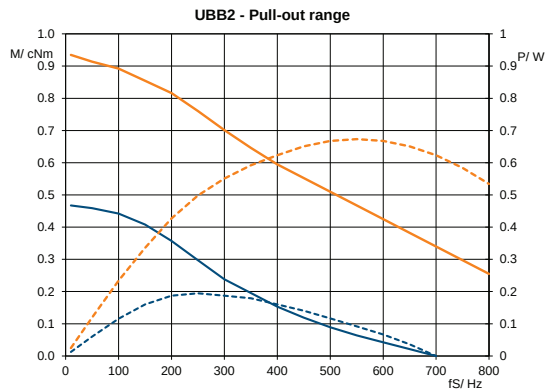

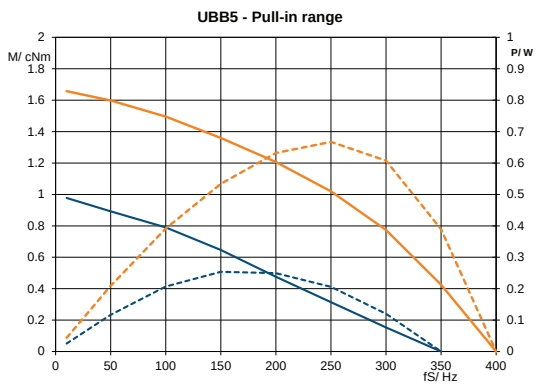

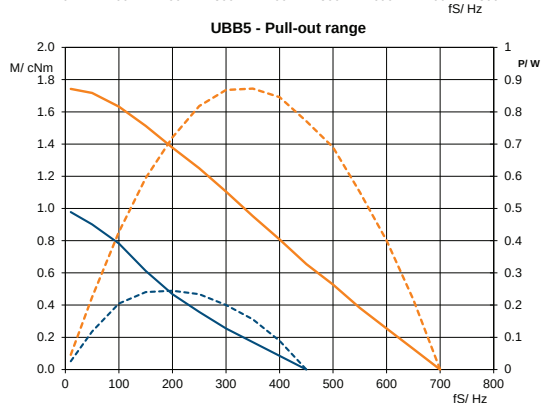

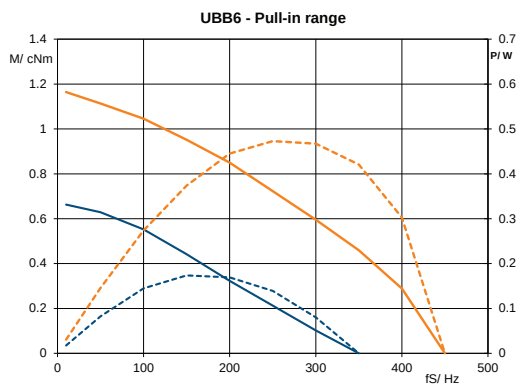

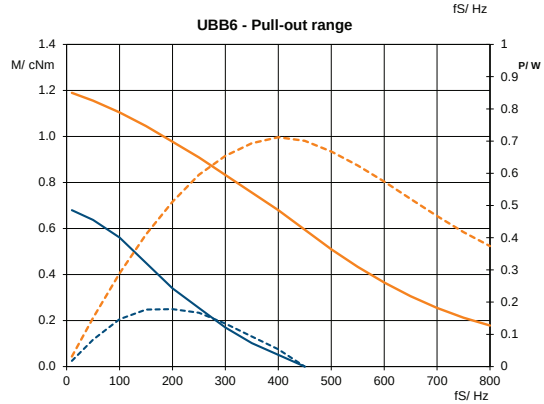

M - Duty cycle 30 %
M - Duty cycle 100%
P - Duty cycle 30 %
P - Duty cycle 100 %

UDB

UDB1/2

Dimensions (mm)	∅ 48 x 24
Step angle (°)	15
Holding torque (cNm)	2.3/1.8
Detent torque (cNm)	0.3
Winding	bipolar/unipolar
Gear combination	D, M, B, F, V, J

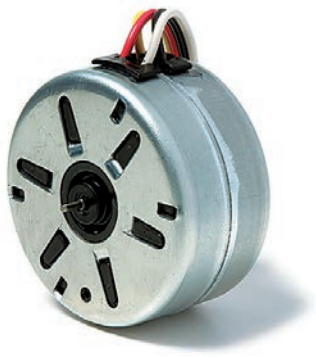

Note: All torque and power output values are minimum values, at rated voltage and motor temperature 23°C.

Standard Data

Climatic class	wide-spread according to DIN IEC 60721-2-1 : 2015
Ambient temperature operation	°C -15...+60
Ambient temperature storage	°C -20...+100
Thermal resistance at f=0 R_{therm}	18 K/W
Thermal class	105 (A) according to DIN EN 60085 : 2008
Approval	standard
Mounting	any position
Electrical connection	cable
Protection	UDB1: IP30, UDB2: IP40 according to DIN EN 60529 : 2014
Weight	132 g
Rotor stalling	motor can be stopped when voltage is applied, without being overheated
Bearings	sintered bronze, self-lubricating
Electric strength	according to DIN EN 60034-1/DIN EN 60335-1

Order Reference

Type	Stepper Motor	UDB	1	0	N	02	R	N	
Configuration	1 bipolar 2 unipolar								
Rotor shaft, mounting	0 centring 8 mm, shaft 1.5 mm, clip 1 centring 8 mm, shaft 2.0 mm, clip								
Approval	N Approval Standard								
Resistance	See next page Resistance per winding for bipolar or unipolar.								
Direction	reversible								
Cable	N cable 150 mm (other on request)								

All specifications are representative only and maybe subject to variation. For confirmation of values, please contact Johnson Electric.
Please also read "Saia Motors Important Notes" on catalog or at www.johnsonelectric.com/SaiaMotorsNotes

UDB

Technical Data

bipolar (UDB1)	Holding torque M_H	cNm	2.3		
	Detent torque M_S	cNm	0.3		
	Rotor inertia J_R	gcm2	6.3		
	Rated voltage U_N	V	6	12	24
	Duty cycle	%	100	100	100
	Resistance R_{20}	Ω	15	78	350
	Winding code		01	02	03
unipolar (UDB2)	Holding torque M_H	cNm	1.8		
	Detent torque M_S	cNm	0.3		
	Rotor inertia J_R	gcm2	6.3		
	Rated voltage U_N	V	6	12	24
	Duty cycle	%	100	100	100
	Resistance R_{20}	Ω	19	75	300
	Winding code		01	02	04
	Steps per revolution		24		
	Winding temperature T_{max}	°C	105		
	Direction of rotation		reversible		

Dimensions

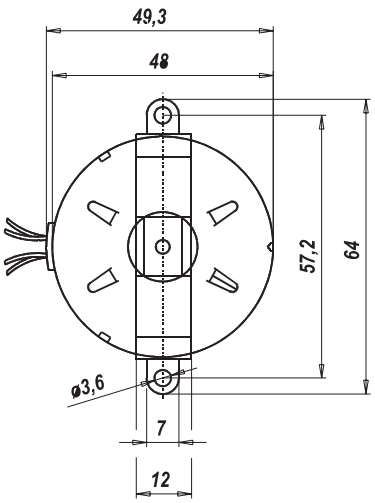

Mounting with screw clip
(item no. 4186 48080)

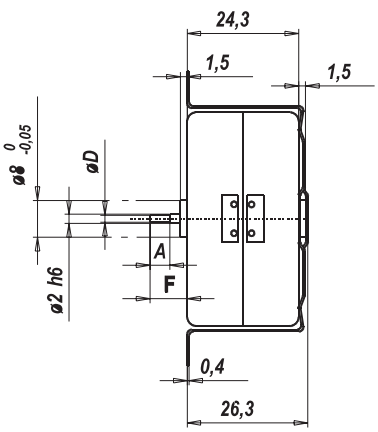

Mounting with snap-on clip
(item no. 4199 48040)

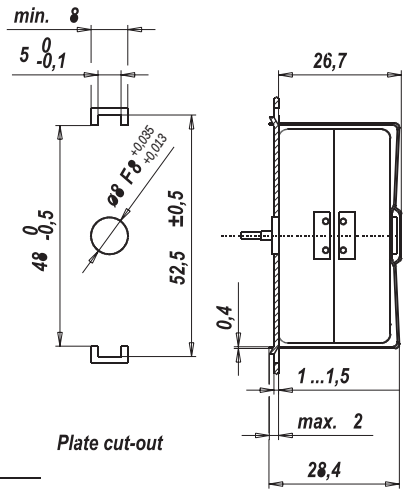

øD Rotor shaft	Dimension A	Dimension F
1,5js8 $^{+0,007}_{-0,007}$	4,3	6,5
2h6 $^{0}_{-0,006}$	—	8,2

UDB

Performance Chart

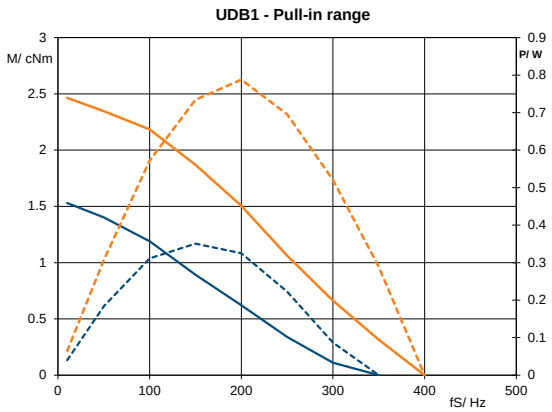

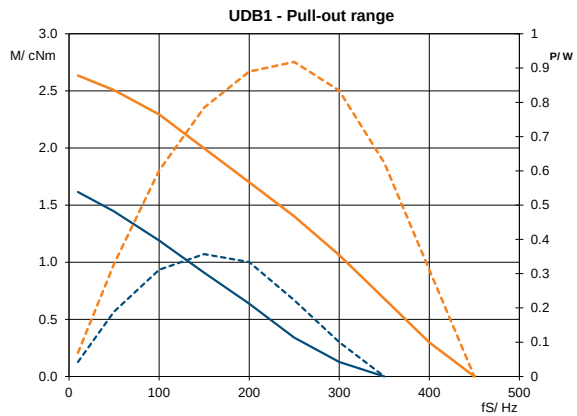

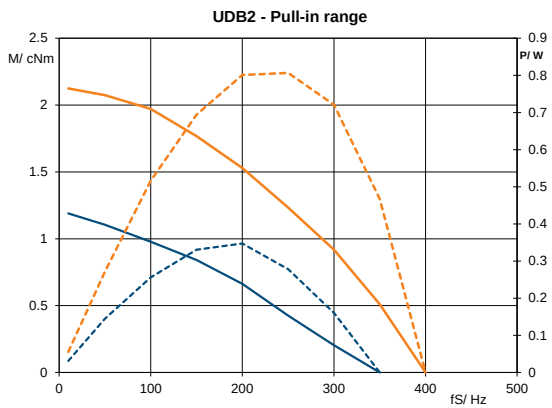

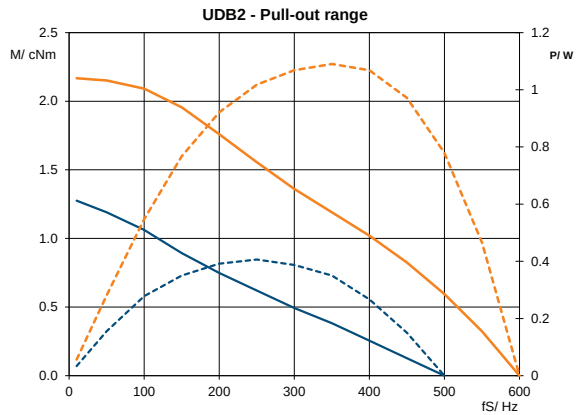

M - Duty cycle 30 %
M - Duty cycle 100%
P - Duty cycle 30 %
P - Duty cycle 100 %

UFD

UFD1/2

Dimensions (mm)	∅ 52 x 28
Step angle (°)	7.5
Holding torque (cNm)	5.4/3.9
Detent torque (cNm)	0.38
Winding	bipolar/unipolar
Gear combination	D, M, B, F, V, J, O, P

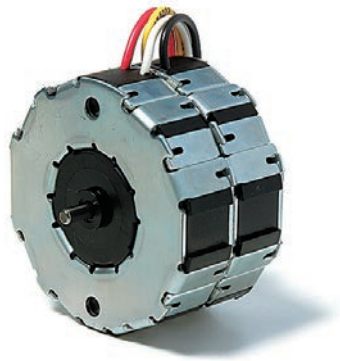

Note: All torque and power output values are minimum values, at rated voltage and motor temperature 23°C.

Standard Data

Climatic class	wide-spread according to DIN IEC 60721-2-1 : 2015
Ambient temperature operation	°C -15...+55
Ambient temperature storage	°C -20...+100
Thermal resistance at f=0 R_{therm}	13 K/W
Thermal class	105 (A) according to DIN EN 60085 : 2008 (130 / B on request)
Approval	standard (UL/CSA on request)
Mounting	any position
Electrical connection	lead wires AWG22, insulation Ø 1.72 ± 0.08 mm
Protection	IP40 according to DIN EN 60529 : 2014
Weight	180 g
Rotor stalling	motor can be stopped when voltage is applied, without being overheated
Bearings	sintered bronze, self-lubricating
Electric strength	according to DIN EN 60034-1/DIN EN 60335-1

Order Reference

Type	Stepper Motor						UFD	1	0	N	02	R	N
Configuration	1	bipolar, two coils											
	2	unipolar, two coils											
Rotor shaft, mounting	0	centring 8 mm, shaft 3.0 mm, clip	E	centring 10 mm, shaft 3.0 mm, screw plate									
	1	centring 8 mm, shaft 2.0 mm, clip	K	centring 10 mm, shaft 2.0 mm, screw plate									
	2	centring 8 mm, shaft 1.5 mm, clip	M	centring 10 mm, shaft 1.5 mm, screw plate									
	3	centring 8 mm, shaft 3.0 mm, screw plate	B	centring 10 mm, shaft 3.0 mm, clip									
	4	centring 8 mm, shaft 2.0 mm, screw plate	A	centring 10 mm, shaft 2.0 mm, clip									
	5	centring 8 mm, shaft 1.5 mm, screw plate	C	centring 10 mm, shaft 1.5 mm, clip									
Approval	N	Approval Standard											
Resistance		See next page Resistance per winding for bipolar or unipolar.											
Direction		reversible											
Cable		E cable 150 mm (other on request)											

All specifications are representative only and maybe subject to variation. For confirmation of values, please contact Johnson Electric.
Please also read "Saia Motors Important Notes" on catalog or at www.johnsonelectric.com/SaiaMotorsNotes

UFD

Technical Data

bipolar (UFD1)	Holding torque M_H	cNm	5.4		
	Detent torque M_S	cNm	0.38		
	Rotor inertia J_R	gcm2	14.4		
	Rated voltage U_N	V	6	12	24
	Duty cycle	%	100	100	100
	Resistance R_{20}	Ω	9.5	52	250
	Winding code		01	02	03
unipolar (UFD2)	Holding torque M_H	cNm	3.9		
	Detent torque M_S	cNm	0.38		
	Rotor inertia J_R	gcm2	14.4		
	Rated voltage U_N	V	6	12	24
	Duty cycle	%	100	100	100
	Resistance R_{20}	Ω	15	61	251
	Winding code		01	02	03
	Steps per revolution		48		
	Winding temperature Tmax		°C	105	
	Direction of rotation		reversible		
	Rotor shaft		3, ∅ D = 3h6, Dim. A = „-”		

Dimensions

Mounting with screw clip
(item no. 4199 48130)

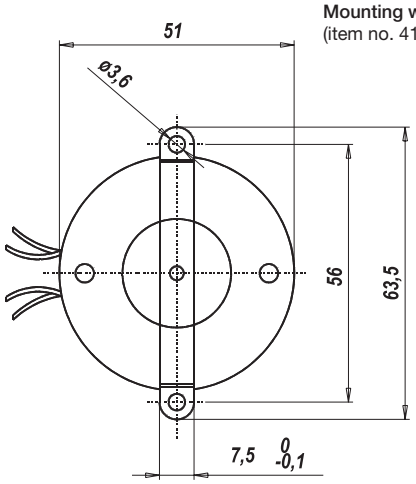

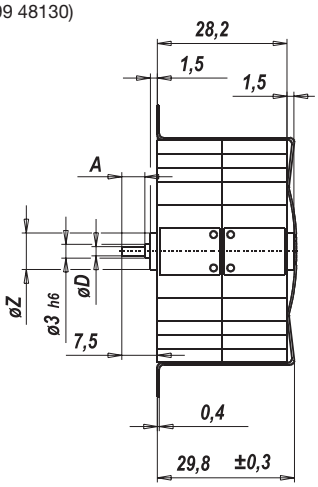

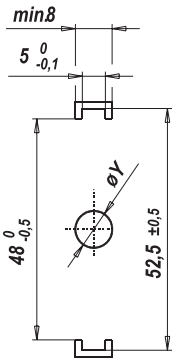

Plate cut-out

Mounting with snap-on clip
(item no. 4199 48100)

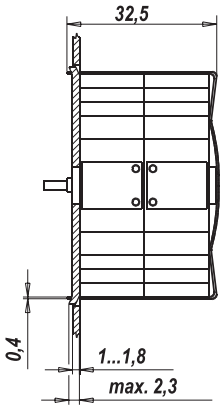

Mounting with screw plate

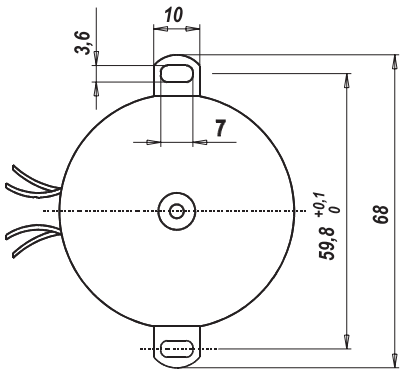

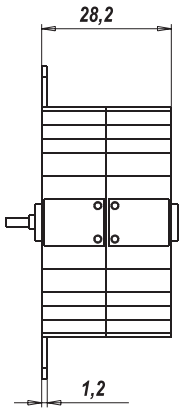

øRotor-shaft	øD	Dim. A
1,5	1,5js8	5
2	2js8	5
3	3h6	–

Type	øZ	øY
UFD	8 0 -0,05	8F8
	10 0 -0,05	10F8

UFD

Performance Chart

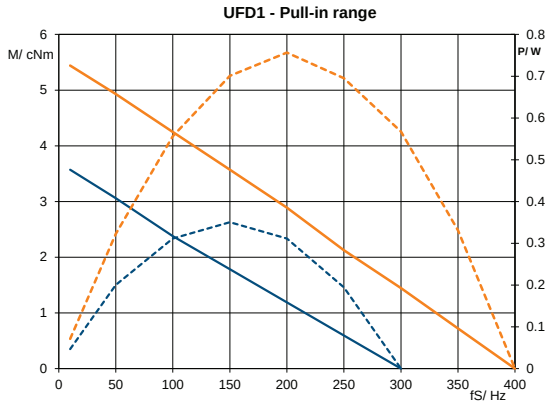

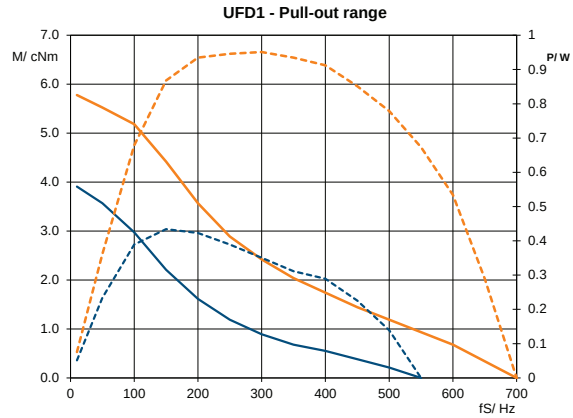

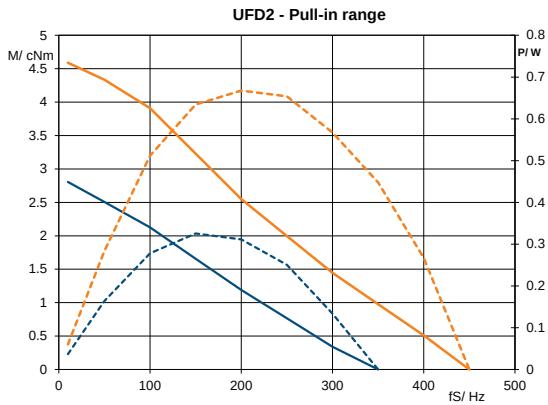

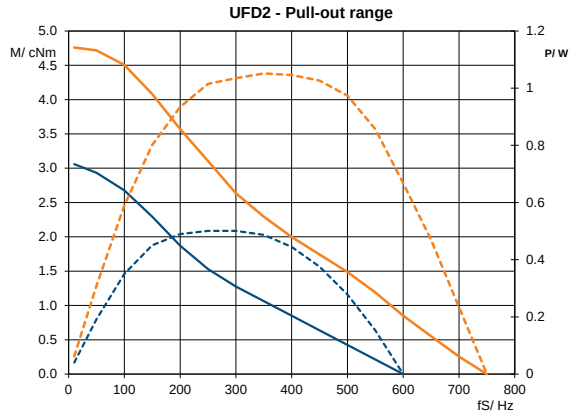

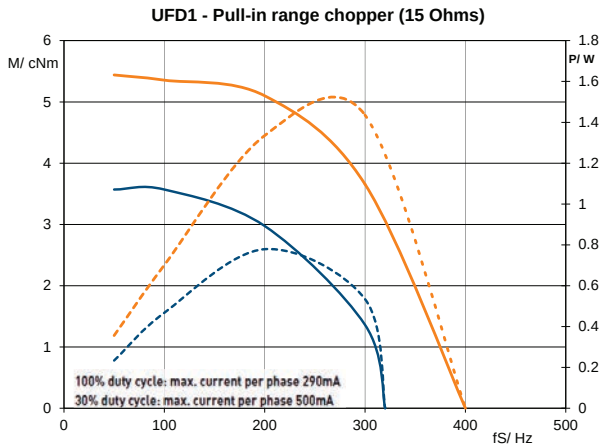

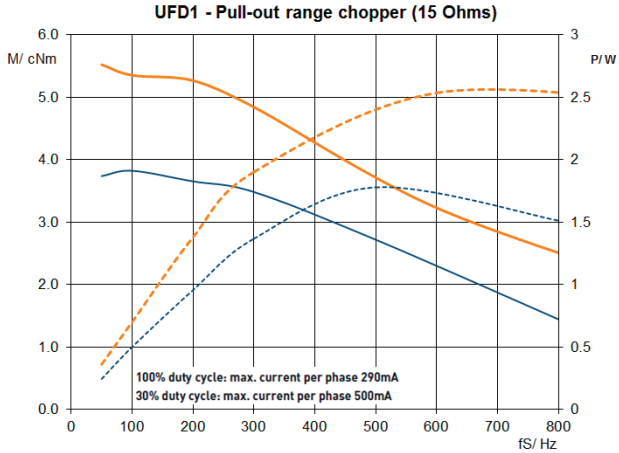

M - Duty cycle 30 %
M - Duty cycle 100%
P - Duty cycle 30 %
P - Duty cycle 100 %

UFB

UFB1/2/5; UFB3/4

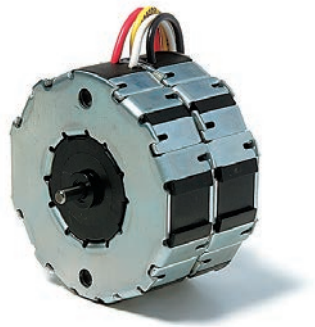

Dimensions (mm)	∅ 52 x 28 / ∅ 52 x 56
Step angle (°)	15
Holding torque (cNm)	3.7–4.7 (UFB1/2); 7.0 (UFB5); 6.5–8.8 (UFB3/4)
Detent torque (cNm)	0.4 (UFB1/2); 0.68 (UFB5); 0.68 (UFB3/4)
Winding	bipolar/unipolar
Gear combination	D, M, B, F, V, J, O, P

Note: All torque and power output values are minimum values, at rated voltage and motor temperature 23°C.

Standard Data

Climatic class	wide-spread according to DIN IEC 60721-2-1 : 2015
Ambient temperature operation	°C -15...+55
Ambient temperature storage	°C -20...+100
Thermal resistance at f=0 R_{therm}	11 K/W (UFB1/2/5), 7 K/W (UFB3/4)
Thermal class	105 (A) according to DIN EN 60085 : 2008 [130 (B) on request]
Approval	standard (UL/CSA on request)
Mounting	any position
Electrical connection	lead wires AWG22, insulation Ø 1.75 ± 0.08 mm
Protection	IP40 according to DIN EN 60529 : 2014
Weight	180 g (UFB1/2/5), 350 g (UFB3/4)
Rotor stalling	motor can be stopped when voltage is applied, without being overheated
Bearings	sintered bronze, self-lubricating
Electric strength	according to DIN EN 60034-1/DIN EN 60335-1

Order Reference

Type	Stepper Motor						UFB	1	0	N	01	R	N
Configuration	1	bipolar, two coils, standard magnet	3	bipolar, four coils, standard magnet									
	2	unipolar, two coils, standard magnet	4	unipolar, four coils, standard magnet									
	5	bipolar, two coils, stronger magnet											
Rotor shaft, mounting	0	centring 8 mm, shaft 3.0 mm, clip	E	centring 10 mm, shaft 3.0 mm, screw plate *									
	1	centring 8 mm, shaft 2.0 mm, clip	K	centring 10 mm, shaft 2.0 mm, screw plate *									
	2	centring 8 mm, shaft 1.5 mm, clip	M	centring 10 mm, shaft 1.5 mm, screw plate *									
	3	centring 8 mm, shaft 3.0 mm, screw plate *	B	centring 10 mm, shaft 3.0 mm, clip									
	4	centring 8 mm, shaft 2.0 mm, screw plate *	A	centring 10 mm, shaft 2.0 mm, clip									
	5	centring 8 mm, shaft 1.5 mm, screw plate *	C	centring 10 mm, shaft 1.5 mm, clip									
Approval	N	Approval Standard											
Winding code		see next page											
Direction		reversible											
Cable	N	cable 150 mm (other on request)											

* screw plate not for UFB3 and UFB4

All specifications are representative only and maybe subject to variation. For confirmation of values, please contact Johnson Electric.
Please also read "Saia Motors Important Notes" on catalog or at www.johnsonelectric.com/SaiaMotorsNotes

UFB

Technical Data

bipolar			UFB1	UFB3	UFB5
	Holding torque M_H	cNm	4.7	8.8	7.0
	Detent torque M_S	cNm	0.4	0.68	0.68
	Rotor inertia J_R	gcm^2	14.2	24.2	17.8
UFB1/5	Rated voltage U_N	V	6	12	24
	Duty cycle	%	100	100	100
	Resistance R_{20}	Ω	9.5	52	250
	Winding code		01	02	04
UFB3	Rated voltage U_N	V	6	12	24
	Duty cycle	%	100	100	100
	Resistance R_{20}	Ω	5	25.5	125
	Winding code		01	02	04
unipolar			UFB2	UFB4	
	Holding torque M_H	cNm	3.7	6.5	
	Detent torque M_S	cNm	0.4	0.68	
	Rotor inertia J_R	gcm^2	14.2	24.2	
UFB2	Rated voltage U_N	V	6	12	24
	Duty cycle	%	100	100	100
	Resistance R_{20}	Ω	15	61	251
	Winding code		01	02	03
UFB4	Rated voltage U_N	V	6	12	24
	Duty cycle	%	100	100	100
	Resistance R_{20}	Ω	7.5	30.5	125
	Winding code		01	02	03
	Steps per revolution	24			
	Winding temperature T_{max}	105° C			
	Direction of rotation	reversible			

UFB

Dimensions

UFB1/2/5

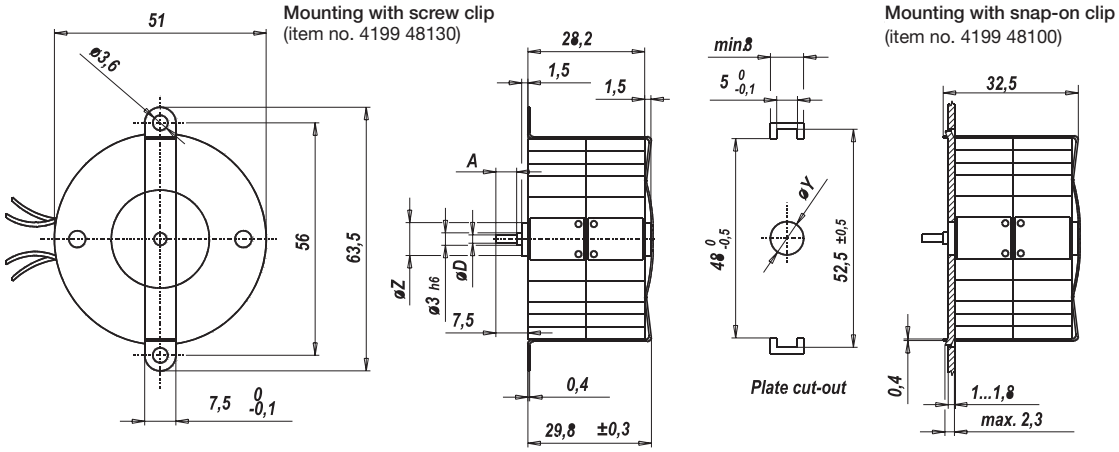

Mounting with screw plate

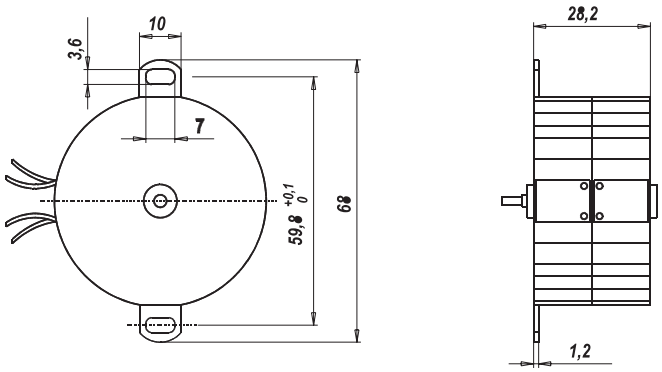

øRotor-shaft	øD	Dim. A
1,5	1,5js8	5
2	2js8	5
3	3h6	-

øZ	øY
8 0 -0,05	8F8
10 0 -0,05	10F8

UFB3/4

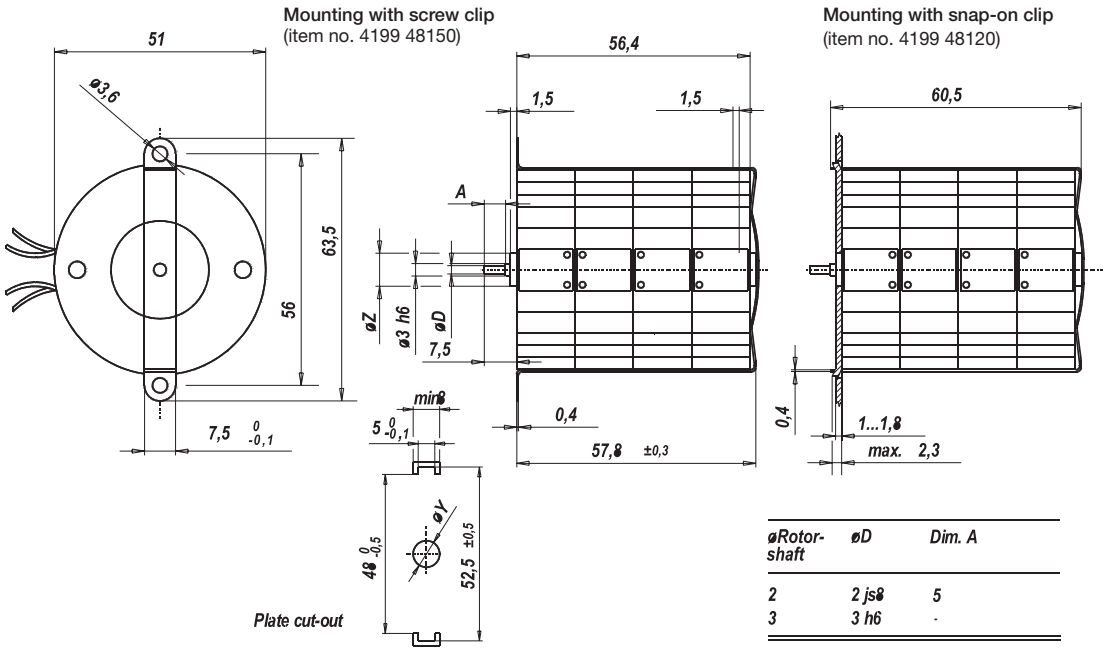

øRotor-shaft	øD	Dim. A
2	2 js8	5
3	3 h6	-

øZ	øY
8 0 -0.05	8F8
10 0 -0.05	10F8

UFB

Performance Chart

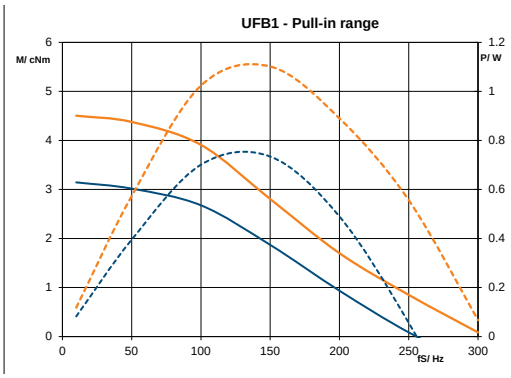

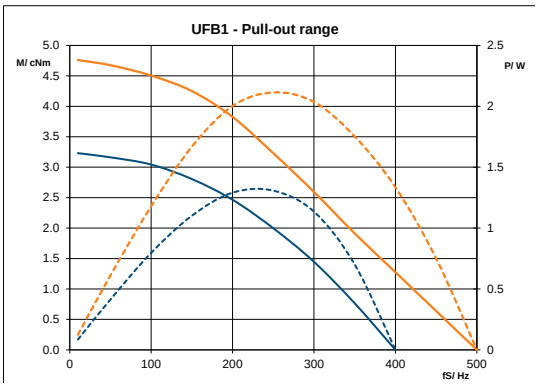

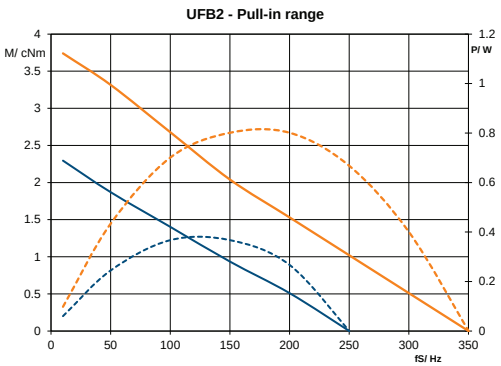

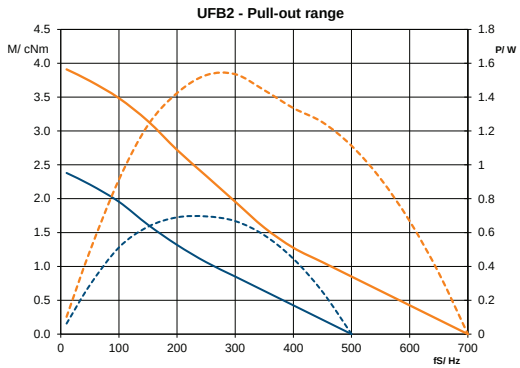

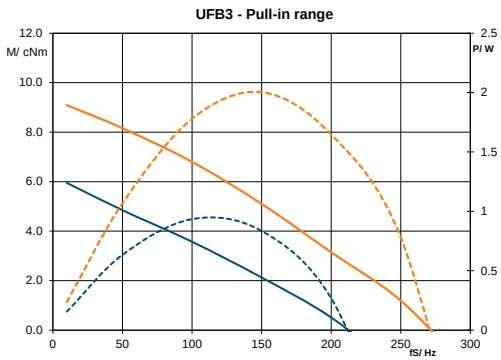

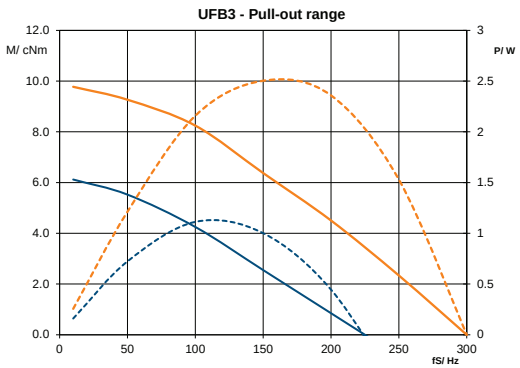

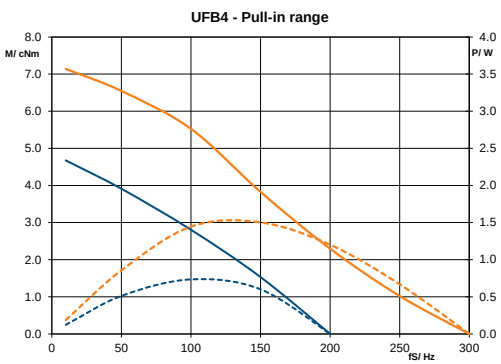

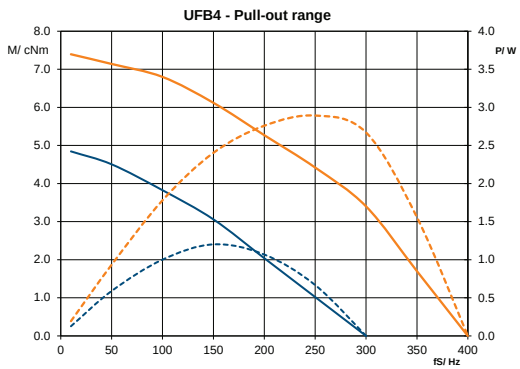

M - Duty cycle 30 %
M - Duty cycle 100%
P - Duty cycle 30 %
P - Duty cycle 100 %

UFB

Performance Chart

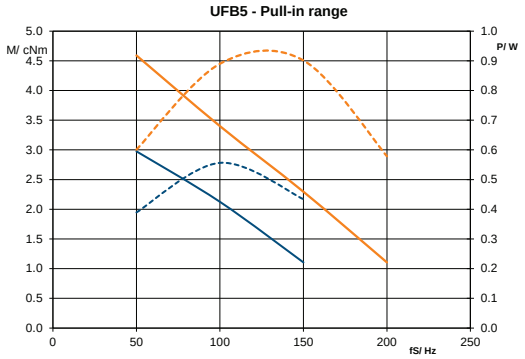

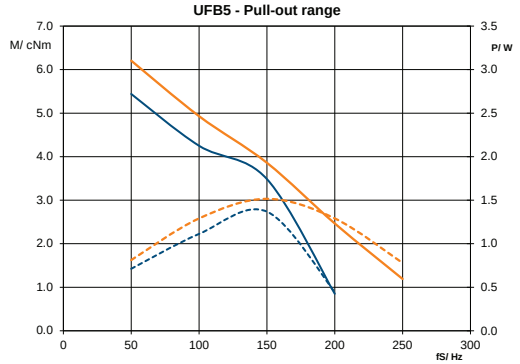

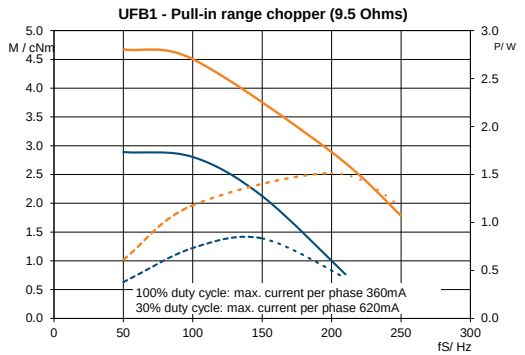

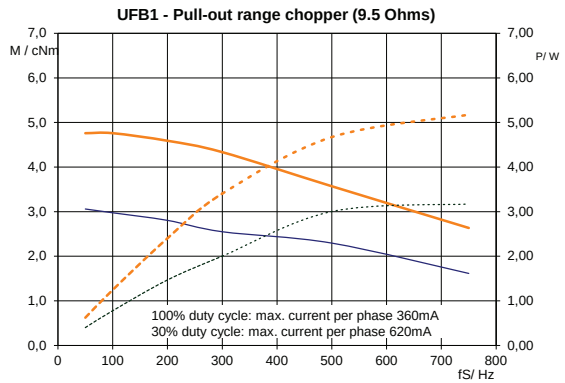

M - Duty cycle 30 %
M - Duty cycle 100%
P - Duty cycle 30 %
P - Duty cycle 100 %

UPJ

UPJ

Dimensions (mm)	∅ 64 x 43
Step angle (°)	11.25
Holding torque (cNm)	30 (UPJ1); 45 (UPJ5)
Detent torque (cNm)	2 (UPJ1); 7 (UPJ5)
Winding	bipolar
Gear combination	O, P, R

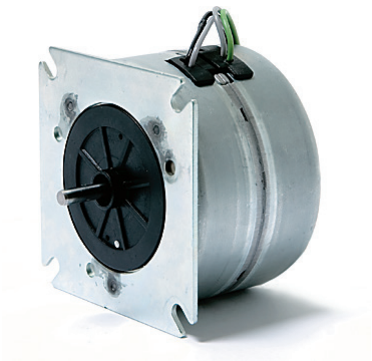

Note: All torque and power output values are minimum values, at rated voltage and motor temperature 23°C.

Standard Data

Climatic class	wide-spread according to DIN IEC 60721-2-1 : 2015
Ambient temperature operation	°C -15 ... +40
Ambient temperature storage	°C -20 ... +100
Thermal resistance at f=0 R_{therm}	29 K/W
Thermal class	130 (B) according to DIN EN 60085 : 2008
Approval	standard
Mounting	any position
Electrical connection	lead wires AWG22, insulation Ø 1.6 ± 0.1 mm
Protection	IP30 according to DIN EN 60529 : 2014
Weight	500 g (UPJ1); 550 g (UPJ5)
Rotor stalling	motor can be stopped when voltage is applied, without being overheated
Bearings	Sintered bronze, self-lubricating

Order Reference

Type	Stepper Motor	UPJ	1	1	N	01	R	E	
Configuration	1 standard magnet 5 stronger magnet								
Rotor shaft, mounting	1 centring 10 mm, shaft length 8,1 mm, screw plate 2 centring 10 mm, shaft length 15,5 mm, screw plate A centring 14 mm, shaft length 8,1 mm, screw plate C centring 14 mm, shaft length 15,5 mm, screw plate								
Approval	N standard								
Winding code	see next page								
Direction	R reversible								
Cable	E 150 mm (other upon request)								

All specifications are representative only and maybe subject to variation. For confirmation of values, please contact Johnson Electric.
Please also read "Saia Motors Important Notes" on catalog or at www.johnsonelectric.com/SaiaMotorsNotes

UPJ

Technical Data

bipolar (UPJ1)	Step angle	°	11.25
	Holding torque MH	cNm	30
	Detent torque Ms	cNm	2
	Rotor inertia JR	gcm2	85
	Steps per revolution		32
	Winding temperature increase	K	90
	Current per winding	A	1.25
	Inductance per winding	mH	9.5
	Power consumption	W	11.5
	Driver mode		Chopper drive
bipolar (UPJ5)	Step angle	°	11.25
	Holding torque MH	cNm	45
	Detent torque Ms	cNm	7
	Rotor inertia JR	gcm2	180
	Steps per revolution		32
	Winding temperature increase	K	90
	Current per winding	A	1.25
	Inductance per winding	mH	8
	Power consumption	W	11.5
	Driver mode		Chopper drive
	Rated voltage U_N	V	4.5
	Duty cycle	%	100
	Resistance R_{20}	Ω	3.7
	Winding code		01

Circuit diagram Motor connections - bipolar

lead wire color	step			
	I	II	III	IV
red	+	+	-	-
blue	-	-	+	+
black	-	+	+	-
brown	+	-	-	+

→ clockwise rotation

← counter-clockwise rotation

UPJ

Dimensions mounting dimensions UP with screw plate

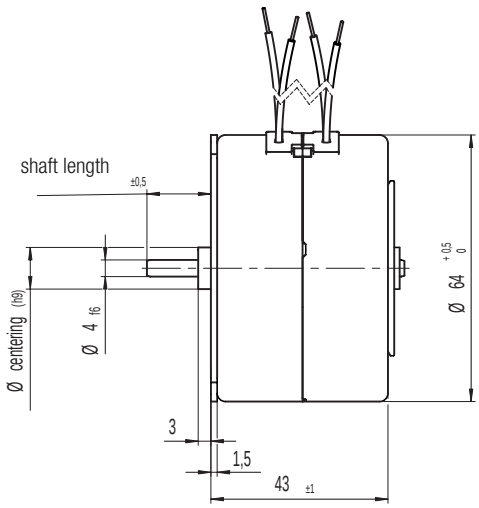

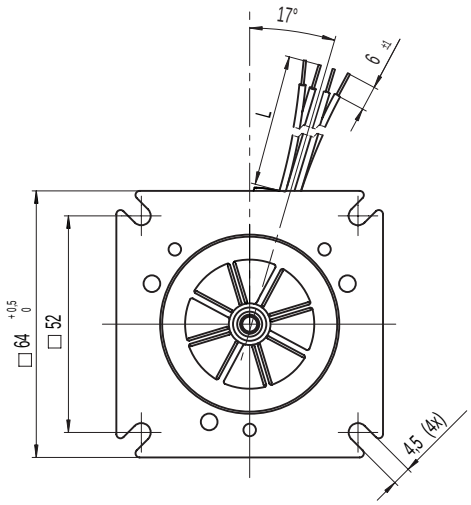

Connection Types UC motors

Connector B
for Molex Milli-Grid 51110-0660

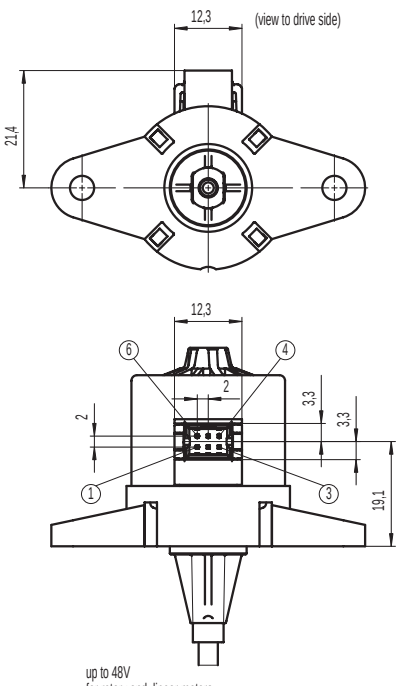

up to 48V
for rotary and linear motors
(bipolar, unipolar, synchronous)

Connector C
for Tyco Modu IV 0-1740209-6

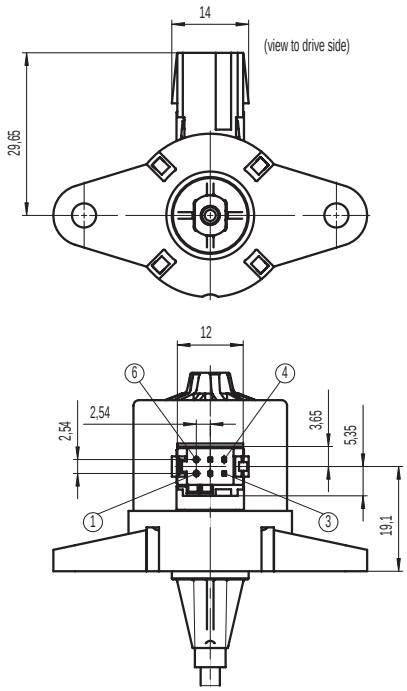

up to 48V
for linear motors
(bipolar, unipolar, synchronous)

Connector D
for Molex C-Grid III 90142-0006

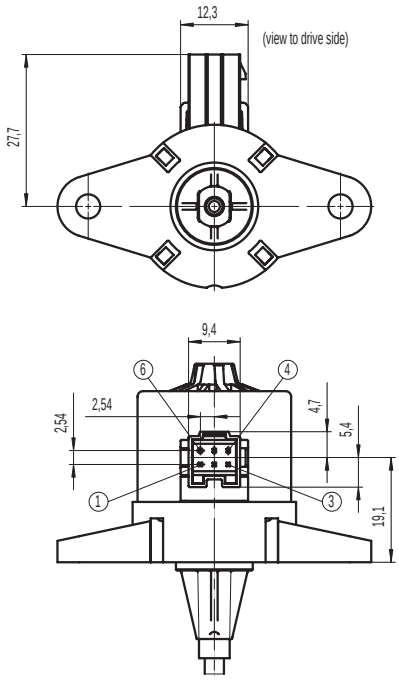

up to 48V
for rotary and linear motors
(bipolar, unipolar, synchronous)

Linear