CL24 Compact DC Motor

Characteristics:

Compact Size, High Power and Torque, Better Sound Quality, Supports IP63

Specifications:

Dimensions	: Ø 24 X 24 X 50 mm
Voltage	: 12 V
Shaft Diameter	: Ø 3.175 mm
No Load Speed	: 4440 rpm
Stall Torque	: 86 mNm
Maximum Output Power	: 10 W
Maximum Efficiency	: 66%
Weight	: 115 g
Operation Temperature	: -40 to 85 deg C
Storage Temperature	: -40 to 100 deg C

Performance Data:

	No Load	Max Efficiency	Max Power	Stall
Current (A)	0.1	-	1.9	3.6
Efficiency (%)	-	66	-	-
Output Power (W)	-	-	10	-
Speed (rpm)	4440	3750	2220	-
Torque (mNm)	-	14	43	86

Application Examples:

Latching / Cinching

Drawing:

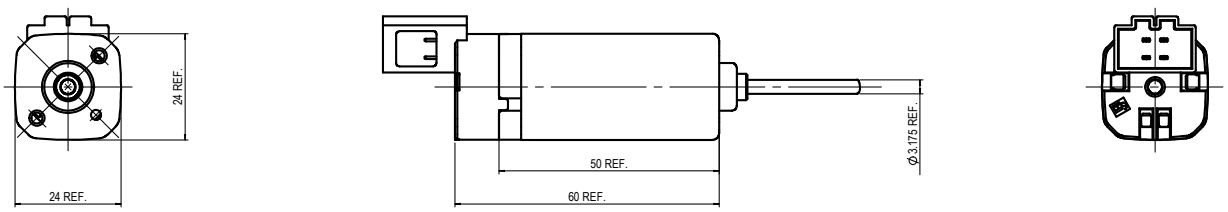

Unit in mm

Performance Curve:

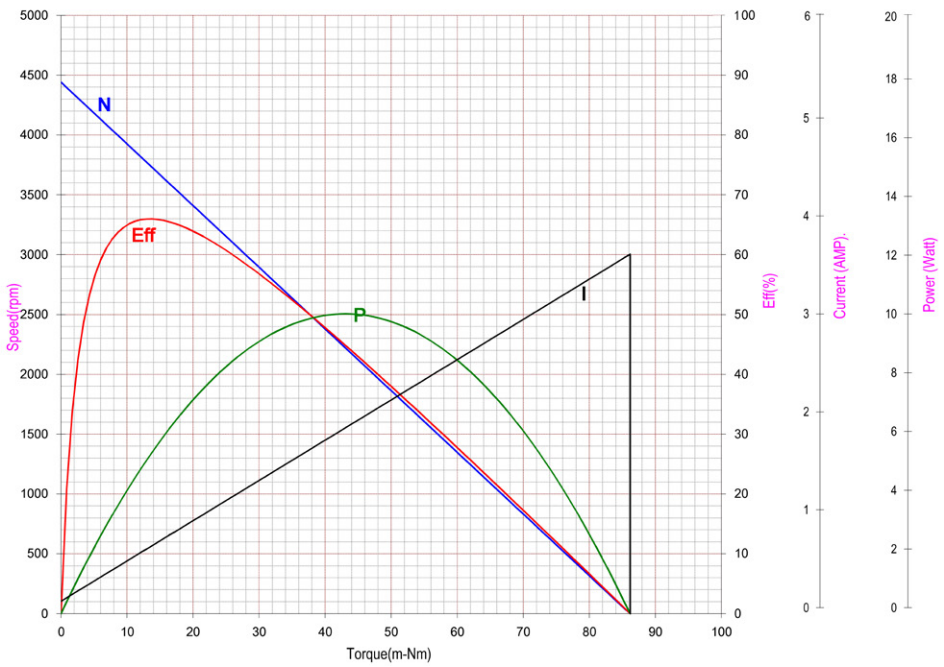

Characteristics:

Compact, high power density PMDC motor

Specifications:

Dimensions	: 18.3 X 30.5 mm
Shaft Diameter	: Ø 2.000 mm
Input Voltage	: 12.5 V DC
No Load Speed	: 13650 rpm
Stall Torque	: 34.00 mNm
Output Power at Maximum Efficiency	: 7.70 W
Maximum Efficiency	: 57%
Weight	: 33 g
Operating Temperature Range	: -40 to 85 °C
Storage Temperature Range	: -40 to 100 °C
Electrcial Connection	: Plug-in Slot Termination
Certification	: RoHS

Performance Data:

	No Load	Stall	Maximum Efficiency	Maximum Power
Current (A)	0.28	4.60	1.13	2.45
Efficiency (%)	-	-	57	41
Output Power (W)	-	-	7.70	12.20
Speed (rpm)	13650	-	10960	6825
Torque (mNm)	-	34.00	6.70	17.00

ERMEC
ERMEC, S.L. BARCELONA
C/ Francesc Teixidó, 22
08918 Badalona SPAIN
Tel. +34 902 450 160
info@ermec.com
www.ermec.com
ERMEC, S.L. - MADRID
C/ Puerto Rico, 4
28222 Majadahonda (Madrid) SPAIN
bilbao@ermec.com
portugal@ermec.com

Outline Drawing:

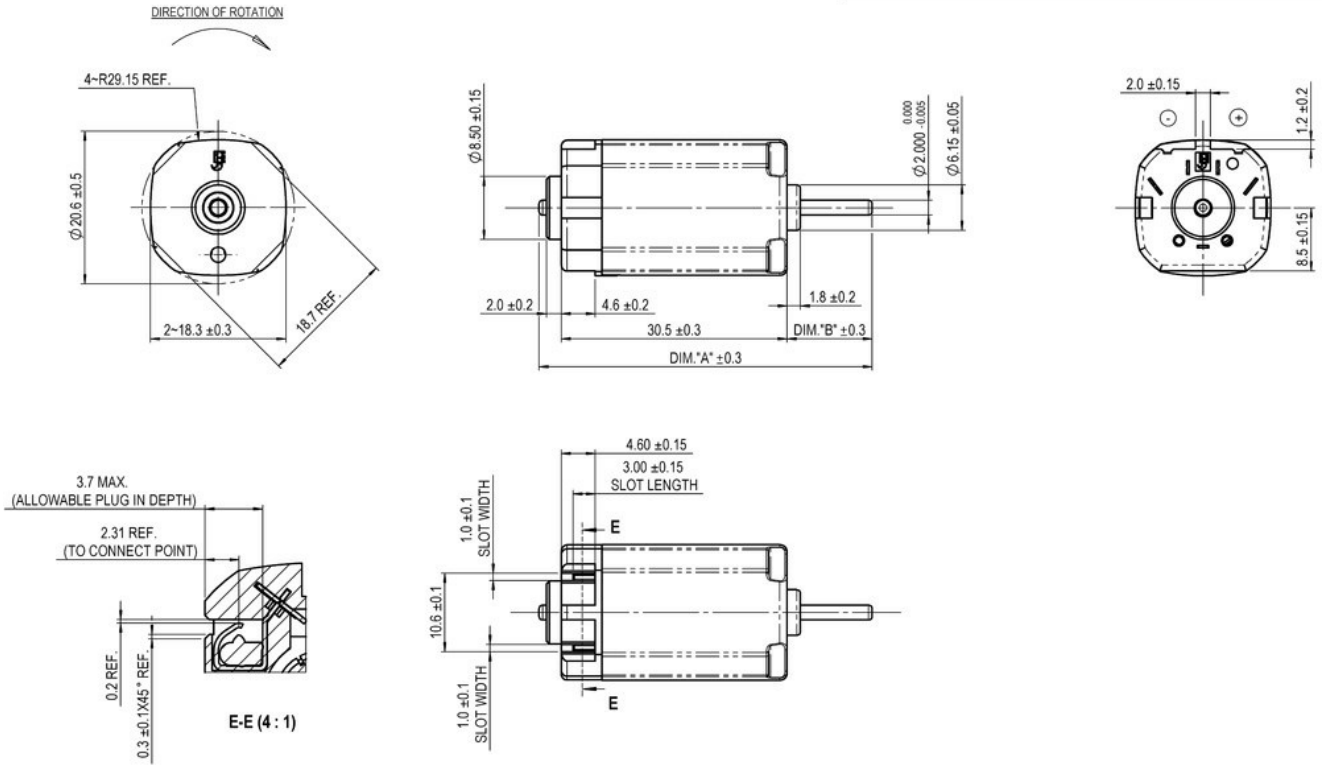

Units in Metric

ERMEC

ERMEC, S.L. BARCELONA
C/ Francesc Teixidó, 22
08918 Badalona SPAIN

Tel. +34 902 450 160
info@ermec.com
www.ermec.com

ERMEC, S.L. - MADRID
C/ Puerto Rico, 4
28222 Majadahonda (Madrid) SPAIN

bilbao@ermec.com
portugal@ermec.com

Characteristics:

Compact, high power density PMDC motor

Specifications:

Dimensions	: Ø 20.0 X 20.0 X 30.5 mm
Shaft Diameter	: Ø 2.000 mm
Input Voltage	: 13.5 V DC
No Load Speed	: 9700 rpm
No Load Current	: 0.16 A
Stall Torque	: 47.50 mNm
Stall Current	: 4.10 A
Torque Constant	: 33.00 mNm/A
Maximum Output Power	: 12.10 W
Maximum Efficiency	: 62%
Weight	: 36 g
Operating Temperature Range	: -40 to 85 °C
Storage Temperature Range	: -40 to 100 °C
Electrcial Connection	: Plug-in Slot Termination
Certification	: RoHS

Performance Data:

	No Load	Stall	Maximum Efficiency	Maximum Power
Current (A)	0.16	4.10	0.80	2.10
Efficiency (%)	-	-	62	43
Output Power (W)	-	-	6.60	12.10
Speed (rpm)	9700	-	8120	4850
Torque (mNm)	-	47.50	7.78	23.80

ERMEC
ERMEC, S.L. BARCELONA
C/ Francesc Teixidó, 22
08918 Badalona SPAIN
Tel. +34 902 450 160
info@ermec.com
www.ermec.com
ERMEC, S.L. - MADRID
C/ Puerto Rico, 4
28222 Majadahonda (Madrid) SPAIN
bilbao@ermec.com
portugal@ermec.com

Outline Drawing:

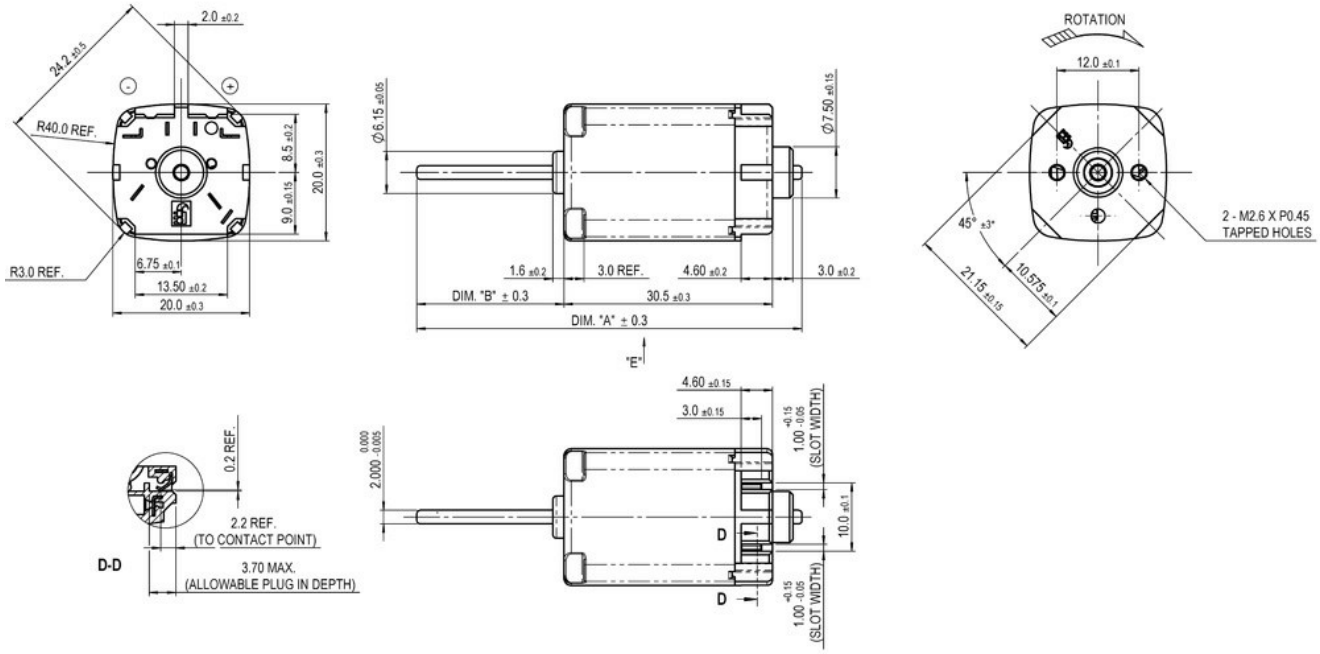

Units in Metric

ERMEC

ERMEC, S.L. BARCELONA
C/ Francesc Teixidó, 22
08918 Badalona SPAIN

Tel. +34 902 450 160
info@ermec.com
www.ermec.com

ERMEC, S.L. - MADRID
C/ Puerto Rico, 4
28222 Majadahonda (Madrid) SPAIN

bilbao@ermec.com
portugal@ermec.com

NS246G-120 Compact C Series Motors

Characteristics:

High torque density, Low noise, Compact design

Specifications:

Dimensions	: Ø 20.0 X 56.3 mm
Shaft Diameter	: Ø 2.000 mm
Input Voltage	: 13.5 V DC
No Load Speed	: 9609 rpm
No Load Current	: 0.15 A
Nominal Speed	: 7976 rpm
Nominal Torque	: 7.62 mNm
Nominal Current	: 0.75 A
Stall Torque	: 44.48 mNm
Stall Current	: 3.69 A
Maximum Output Power	: 11.82 W
Maximum Efficiency	: 63%
Weight	: 60 g
Operating Temperature Range	: -40 to 85 °C
Storage Temperature Range	: -40 to 110 °C

Performance Data:

	No Load	Stall	Maximum Efficiency	Maximum Power
Current (A)	0.15	3.69	0.75	1.92
Efficiency (%)	-	-	63	44
Output Power (W)	-	-	6.37	11.82
Speed (rpm)	9609	-	7976	4804
Torque (mNm)	-	44.48	7.62	22.42

ERMEC

ERMEC, S.L. BARCELONA
C/ Francesc Teixidó, 22
08918 Badalona SPAIN

Tel. +34 902 450 160
info@ermec.com
www.ermec.com

ERMEC, S.L. - MADRID
C/ Puerto Rico, 4
28222 Majadahonda (Madrid) SPAIN

bilbao@ermec.com
portugal@ermec.com

Outline Drawing:

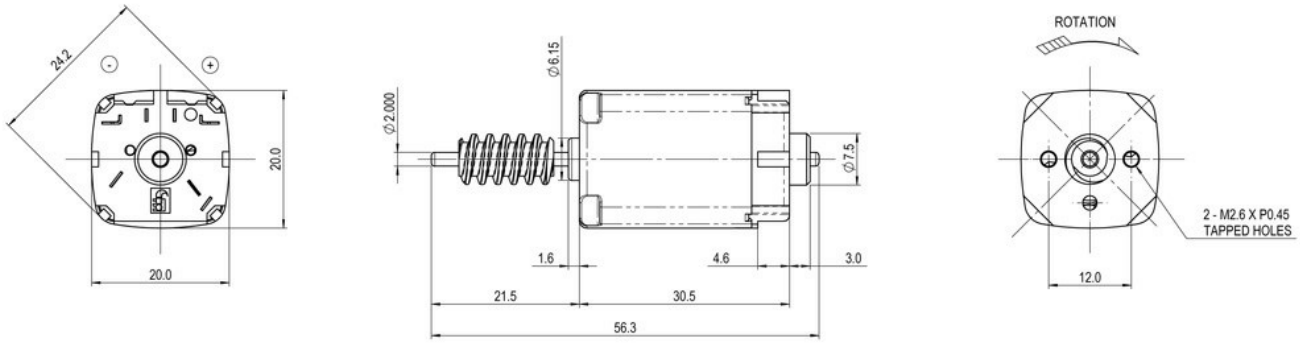

Performance Curves:

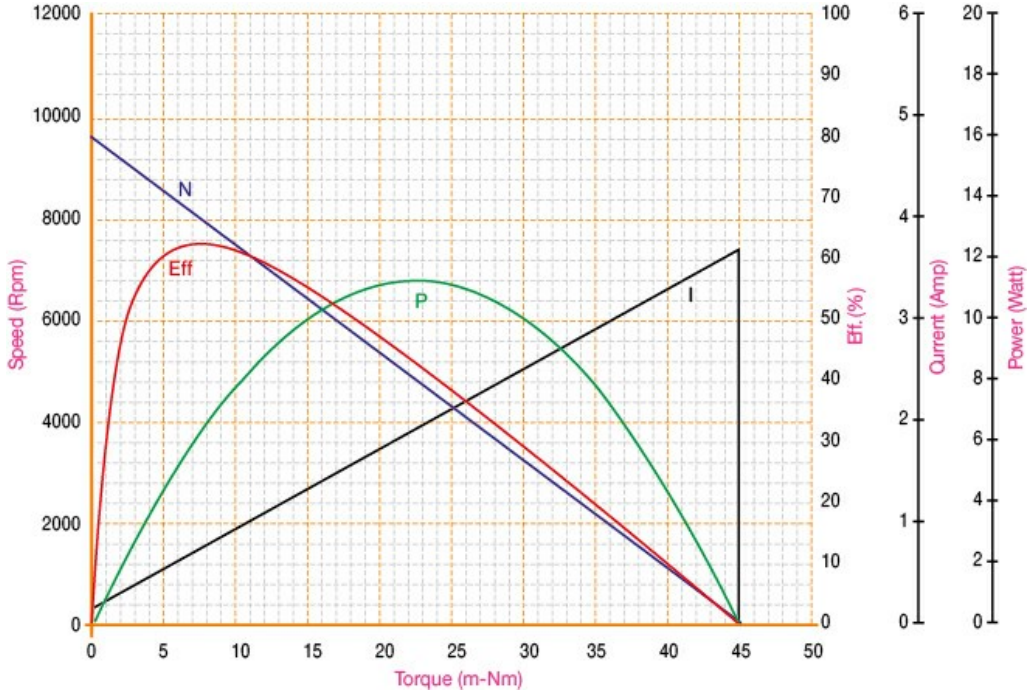

Units in Metric

ERMEC
ERMEC, S.L. BARCELONA
C/ Francesc Teixidó, 22
08918 Badalona SPAIN
Tel. +34 902 450 160
info@ermec.com
www.ermec.com
ERMEC, S.L. - MADRID
C/ Puerto Rico, 4
28222 Majadahonda (Madrid) SPAIN
bilbao@ermec.com
portugal@ermec.com

C-E450 Compact C Series Motors

Characteristics:

Low weight, Compact Size and Extreme High torque

Specifications:

Size	: 33.4X33.4 mm
Length	: 95.5 mm
Weight	: 320 g
Voltage	: 13.0 VDC
Torque*	: 430 mNm
Speed*	: 5600 rpm
Current*	: 22 A
Duty Cycle	: 16000 Cycles
Operation Temperature	: -40 to 85 °C
Storage Temperature	: -40 to 120 °C

*Typical

Performance Data:

	No Load	Stall Max	Max Efficiency	Max Power
Current (A)	0.89	21.54	4.19	11.22
Efficiency (%)	-	-	62.27	43.31
Output Power (W)	-	-	33.95	63.14
Speed (rpm)	5619	-	4720	2810
Torque (mNm)	-	429.21	68.67	214.61

Application Examples:

Seat Adjuster

Drawing:

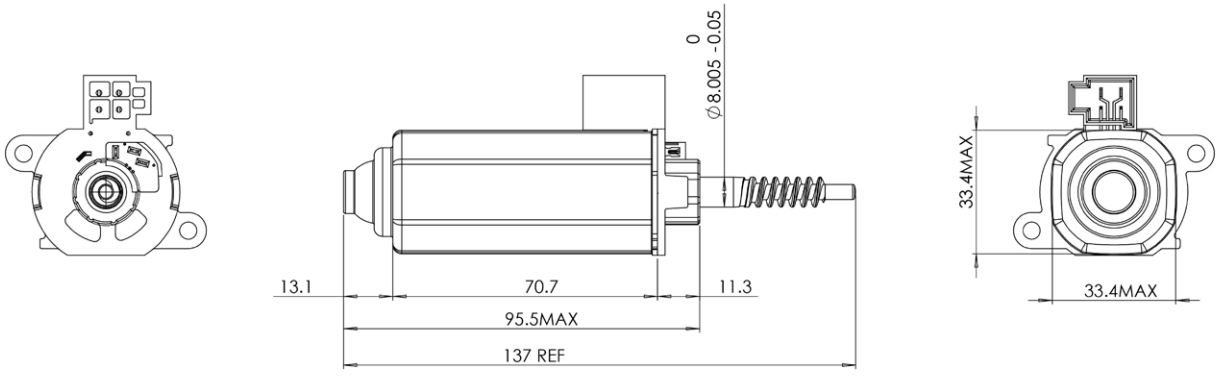

Unit in metric

Performance Curve:

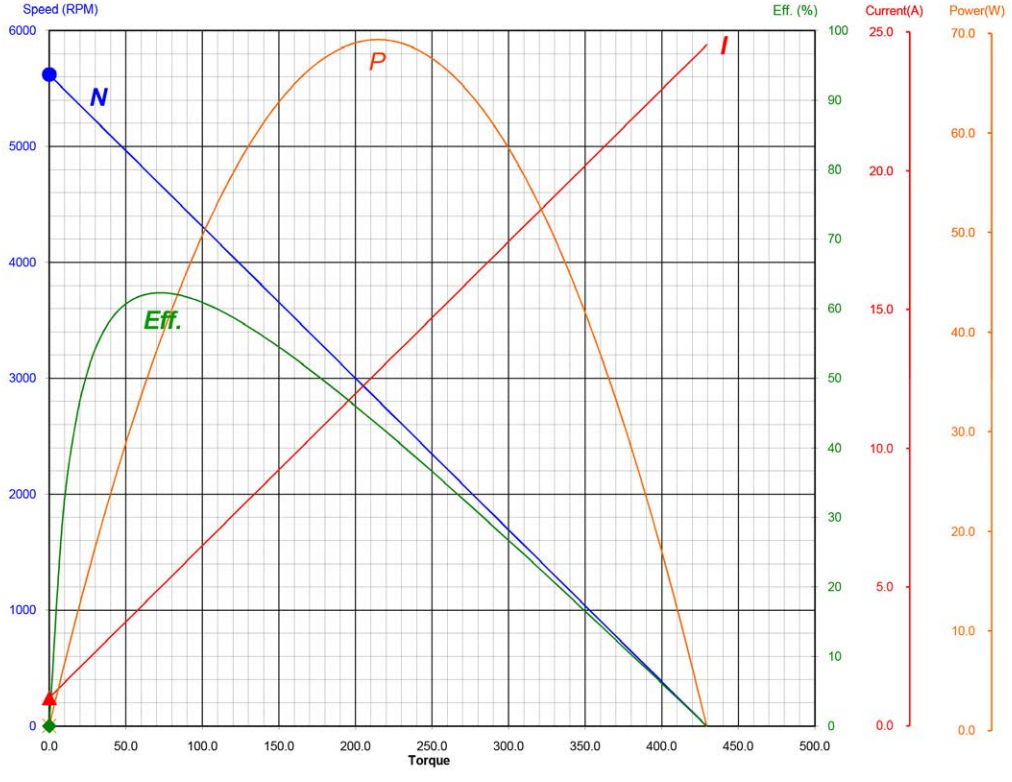

C-E450 Compact C Series Motors

Characteristics:

Low weight, Compact Size and Extreme High torque

Specifications:

Size	: 33.4X33.4 mm
Length	: 95.5 mm
Weight	: 320 g
Voltage	: 13.0 VDC
Torque*	: 430 mNm
Speed*	: 5600 rpm
Current*	: 22 A
Duty Cycle	: 16000 Cycles
Operation Temperature	: -40 to 85 °C
Storage Temperature	: -40 to 120 °C

*Typical

Performance Data:

	No Load	Stall Max	Max Efficiency	Max Power
Current (A)	0.89	21.54	4.19	11.22
Efficiency (%)	-	-	62.27	43.31
Output Power (W)	-	-	33.95	63.14
Speed (rpm)	5619	-	4720	2810
Torque (mNm)	-	429.21	68.67	214.61

Application Examples:

Seat Adjuster

Drawing:

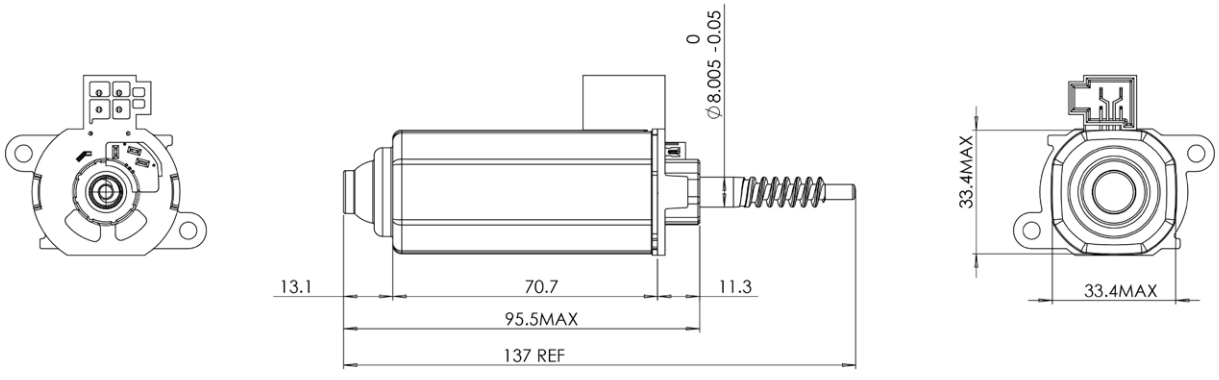

Unit in metric

Performance Curve:

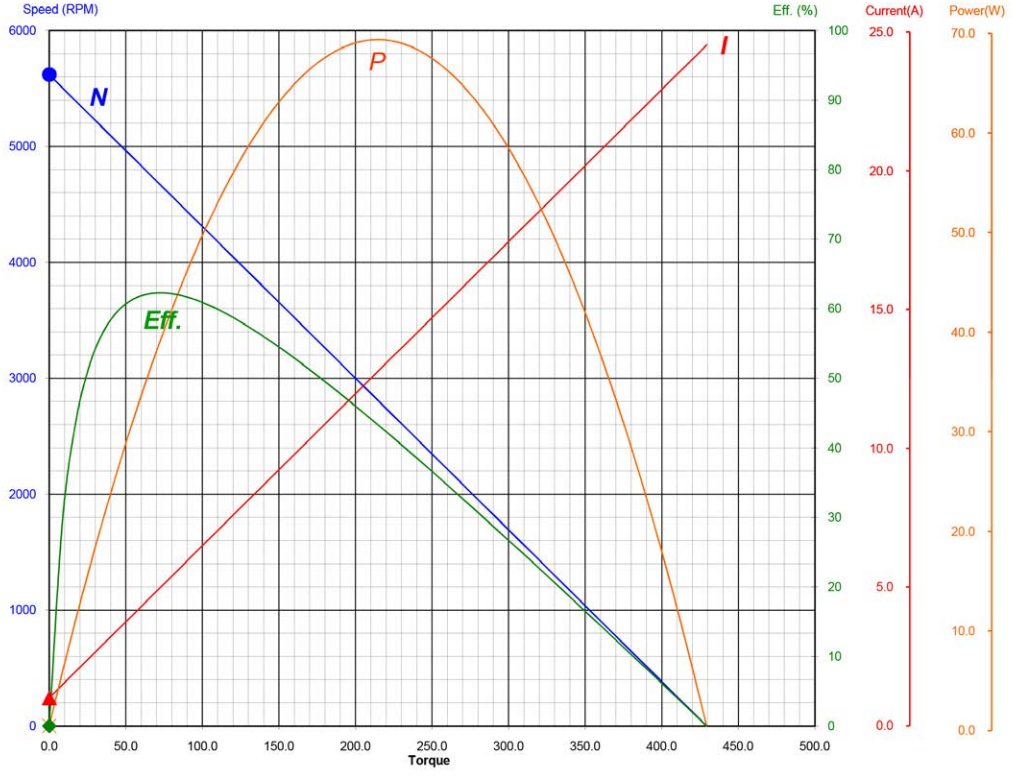

CL30 Compact DC Motor

Characteristics:

Compact Size, High Power and Torque, Better Sound Quality, Supports IP63

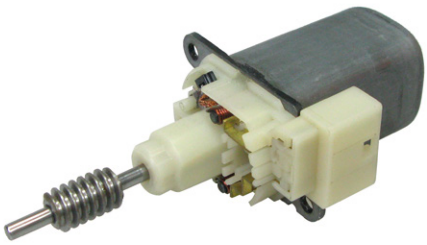

Specifications:

Dimensions	: Ø 30 X 30 X 48 mm
Voltage	: 12 V
Shaft Diameter	: Ø 4.0 mm
No Load Speed	: 5650 rpm
Stall Torque	: 264 mNm
Maximum Output Power	: 39 W
Maximum Efficiency	: 65%
Weight	: 200 g
Operation Temperature	: -40 to 85 deg C
Storage Temperature	: -40 to 100 deg C

Performance Data:

	No Load	Max Efficiency	Max Power	Stall
Current (A)	0.5	-	7.3	14.0
Efficiency (%)	-	65	-	-
Output Power (W)	-	-	39	-
Speed (rpm)	5650	4700	2800	-
Torque (mNm)	-	43	132	264

Application Examples:

Latching / Cinching

Drawing:

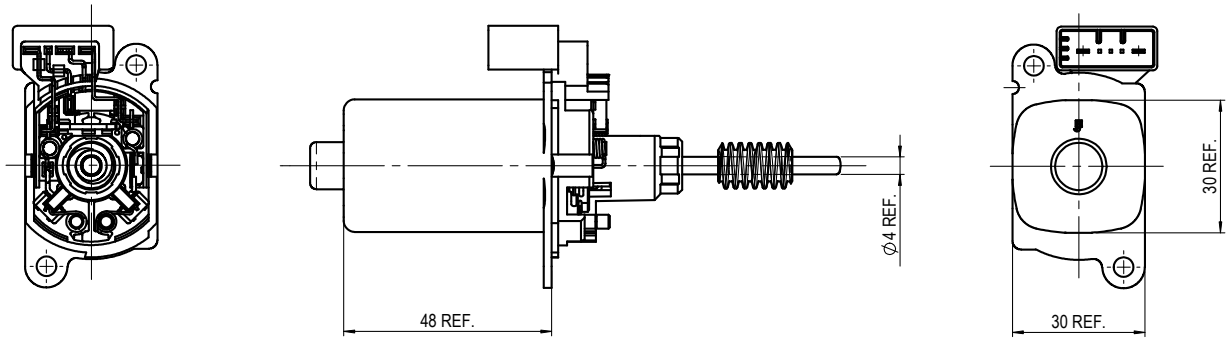

Unit in mm

Performance Curve:

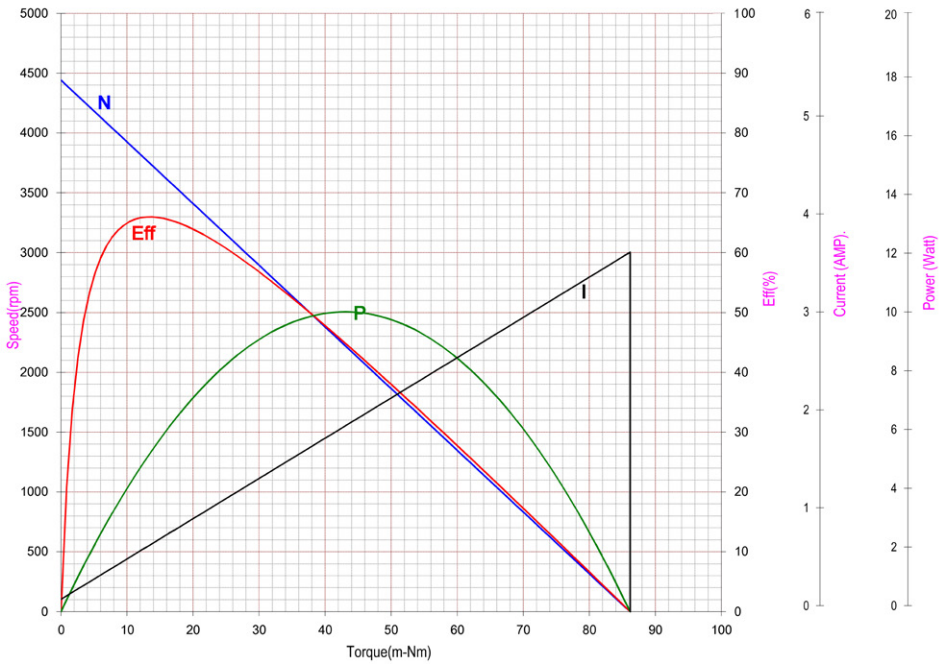

CL30L Compact DC Motor

Characteristics:

Compact Size, High Power and Torque, Better Sound Quality, Supports IP63

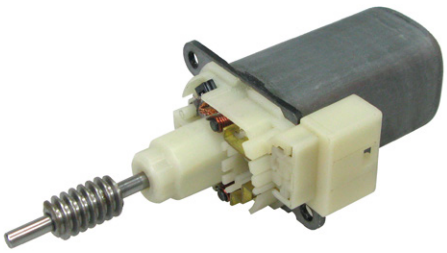

Specifications:

Dimensions	: Ø 30 X 30 X 58 mm
Voltage	: 12 V
Shaft Diameter	: Ø 4.0 mm
No Load Speed	: 3500 rpm
Stall Torque	: 280 mNm
Maximum Output Power	: 25 W
Maximum Efficiency	: 50%
Weight	: 260 g
Operation Temperature	: -40 to 85 deg C
Storage Temperature	: -40 to 100 deg C

Performance Data:

	No Load	Max Efficiency	Max Power	Stall
Current (A)	1.0	-	5.5	10.0
Efficiency (%)	-	50	-	-
Output Power (W)	-	-	25	-
Speed (rpm)	3500	2660	1750	-
Torque (mNm)	-	67	140	280

Application Examples:

Latching / Cinching

Drawing:

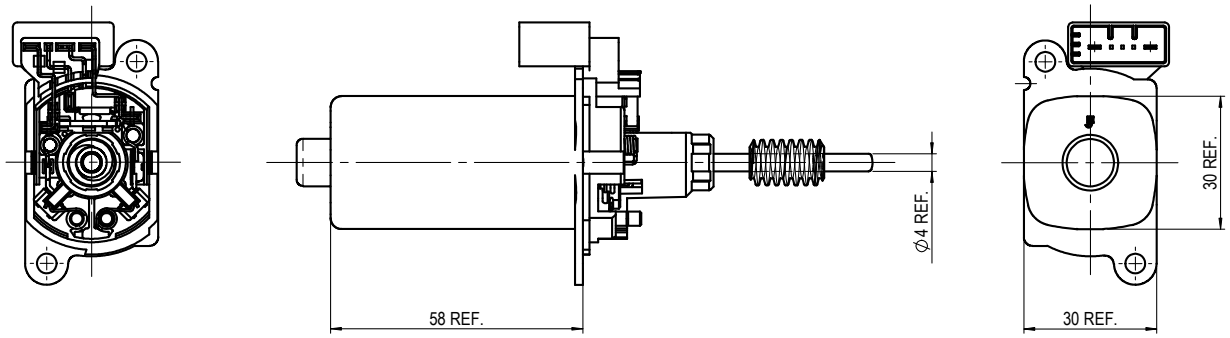

Unit in mm

Performance Curve:

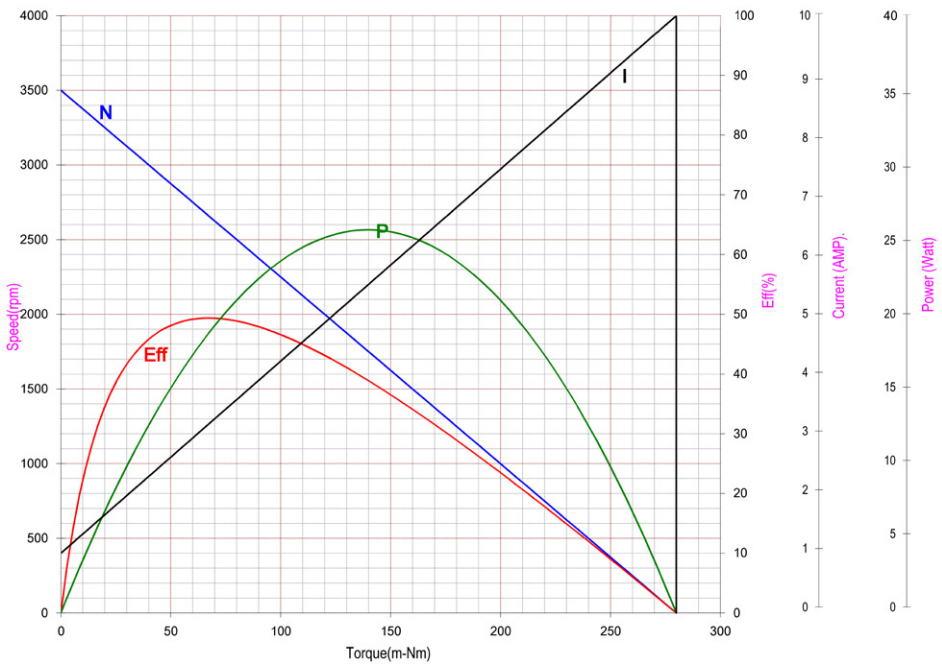

Characteristics:

High stall torque, Compact size, Light weight, Long life, High reliability

Specifications:

Dimensions	: Ø 50.0 X 110.0 mm
Shaft Diameter	: Ø 6.000 mm
Input Voltage	: 12.0 V DC
No Load Speed	: 3100 rpm
No Load Current	: 2.30 A
Nominal Speed	: 2300 rpm
Nominal Torque	: 250.00 mNm
Nominal Current	: 12.00 A
Stall Torque	: 965.00 mNm
Stall Current	: 43.00 A
Torque Constant	: 23.00 mNm/A
Dynamic Resistance	: 0.19 Ω
Motor Regulation	: 3 rpm/mNm
Pole Number	: 4
Maximum Output Power	: 79.00 W
Maximum Efficiency	: 60%
Life Test Condition	: -40 to 120 °C
Weight	: 770 g
Operating Temperature Range	: -40 to 120 °C
Storage Temperature Range	: -40 to 140 °C
Electrcial Connection	: Electrcial Connection

Performance Data:

	No Load	Stall	Maximum Efficiency	Maximum Power
Current (A)	2.30	43.00	10.17	22.80
Efficiency (%)	-	-	60	43
Output Power (W)	-	-	48.58	79.00
Speed (rpm)	3100	-	2529	1561
Torque (mNm)	-	965.00	183.00	482.70

ERMEC

ERMEC, S.L. BARCELONA
C/ Francesc Teixidó, 22
08918 Badalona SPAIN

Tel. +34 902 450 160
info@ermec.com
www.ermec.com

ERMEC, S.L. - MADRID
C/ Puerto Rico, 4
28222 Majadahonda (Madrid) SPAIN

bilbao@ermec.com
portugal@ermec.com

Outline Drawing:

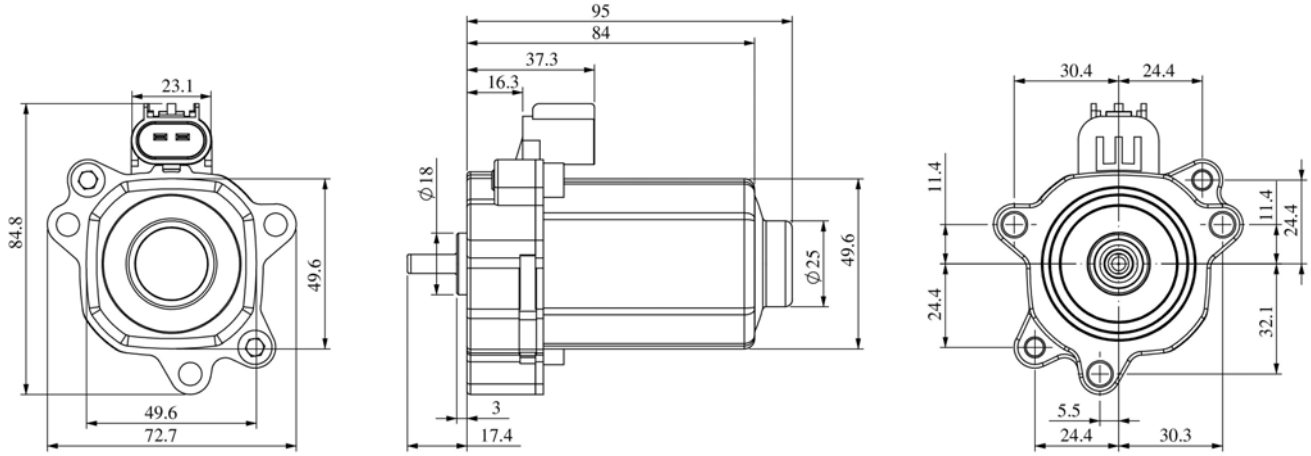

Performance Curves:

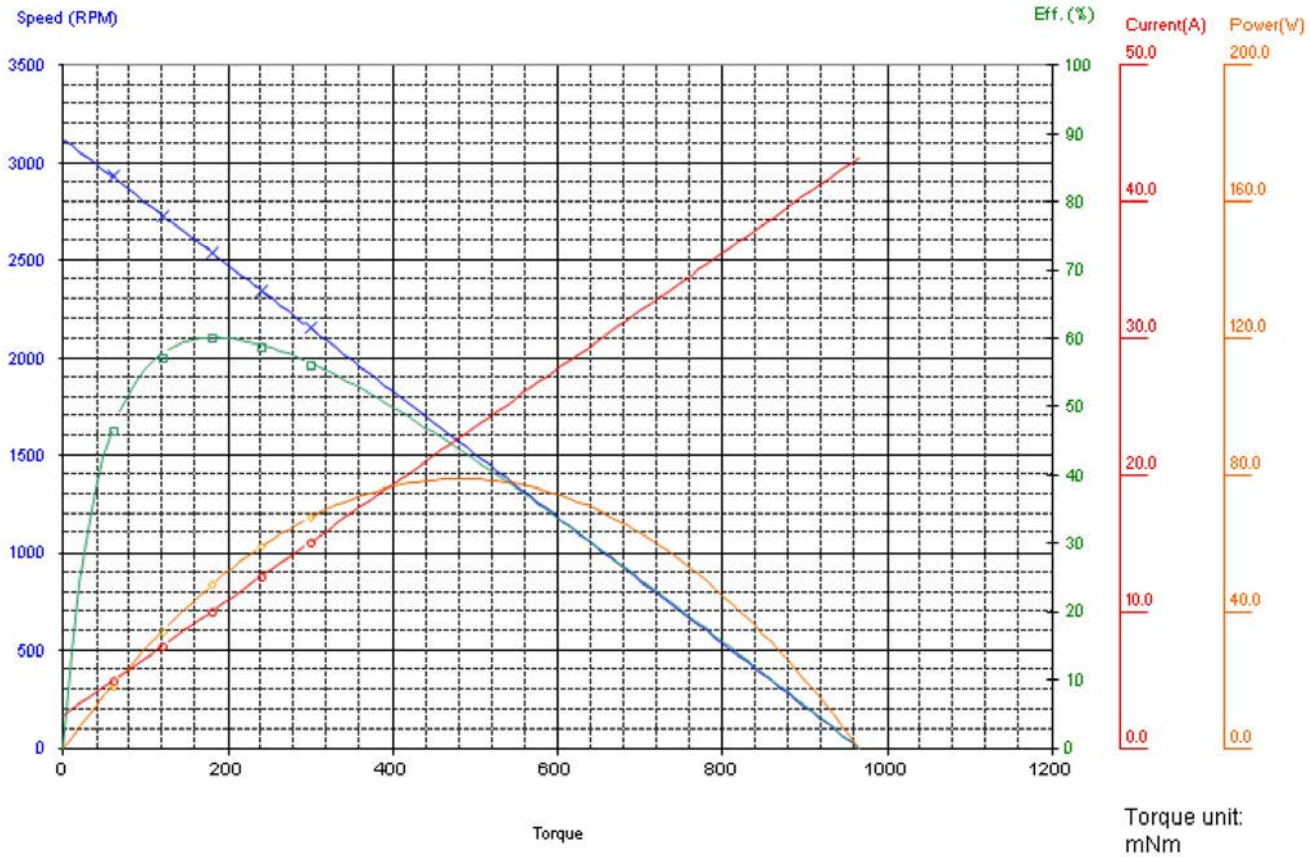

Units in Metric

ERMEC
ERMEC, S.L. BARCELONA
C/ Francesc Teixidó, 22
08918 Badalona SPAIN
Tel. +34 902 450 160
info@ermec.com
www.ermec.com
ERMEC, S.L. - MADRID
C/ Puerto Rico, 4
28222 Majadahonda (Madrid) SPAIN
bilbao@ermec.com
portugal@ermec.com